2002 1100 STX D.I.

PARTS DIAGRAM

Seat

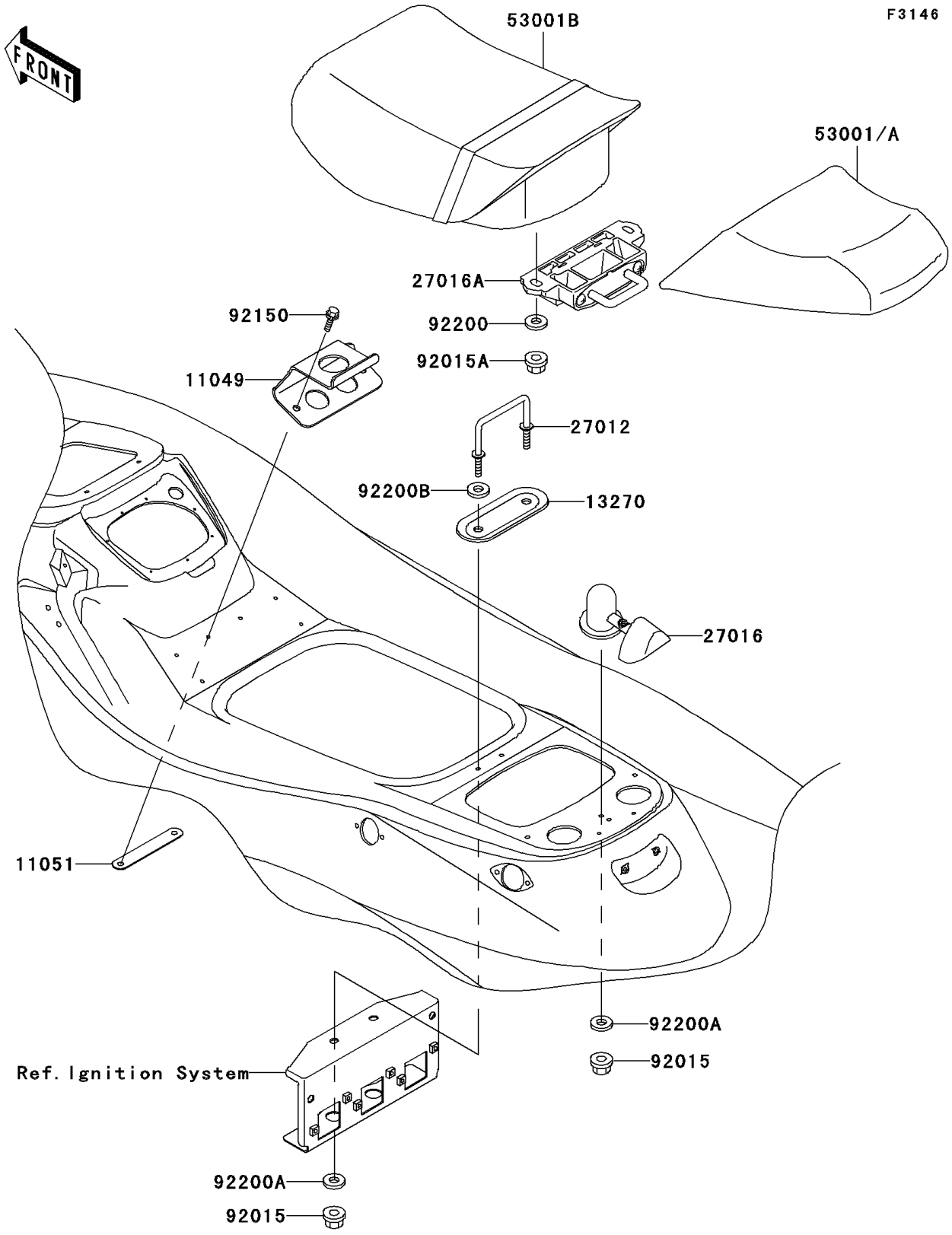

© 2026 Kawasaki Motors Corp., U.S.A.

2002 1100 STX D.I.

PARTS LIST

Seat

ITEM NAME	PART NUMBER	QUANTITY
BRACKET,SEAT (Ref # 11049)	11049-3735	1
BRACKET (Ref # 11051)	11051-3793	1
PLATE,FRONT SEAT HOOK,OUTER (Ref # 13270)	13270-3910	1
HOOK,FRONT SEAT LOCK (Ref # 27012)	27012-3814	1
LOCK-ASSY,SEAT,F.BLACK (Ref # 27016)	27016-3744-6Z	1
LOCK-ASSY,FRONT SEAT (Ref # 27016A)	27016-3747	1
SEAT-ASSY,RR,C.OLIVE (Ref # 53001A)	53001-3746-303	1
SEAT-ASSY,FR,P.B.BEIGE (Ref # 53001B)	53001-3752-PQ	1
NUT,FLANGED,8MM (Ref # 92015)	92015-3709	3
NUT,6MM (Ref # 92015A)	92015-3767	2
BOLT,6X18 (Ref # 92150)	92150-3729	2
WASHER,6.5X20X1.5 (Ref # 92200)	92200-3715	2
WASHER,8.5X25X1.5 (Ref # 92200A)	92200-3717	3
WASHER,8.5X18X3 (Ref # 92200B)	92200-3761	2

© 2026 Kawasaki Motors Corp., U.S.A.