1983 GPz

PARTS DIAGRAM

CARBURETOR ASSY

Kawasaki
Let the Good Times Roll®

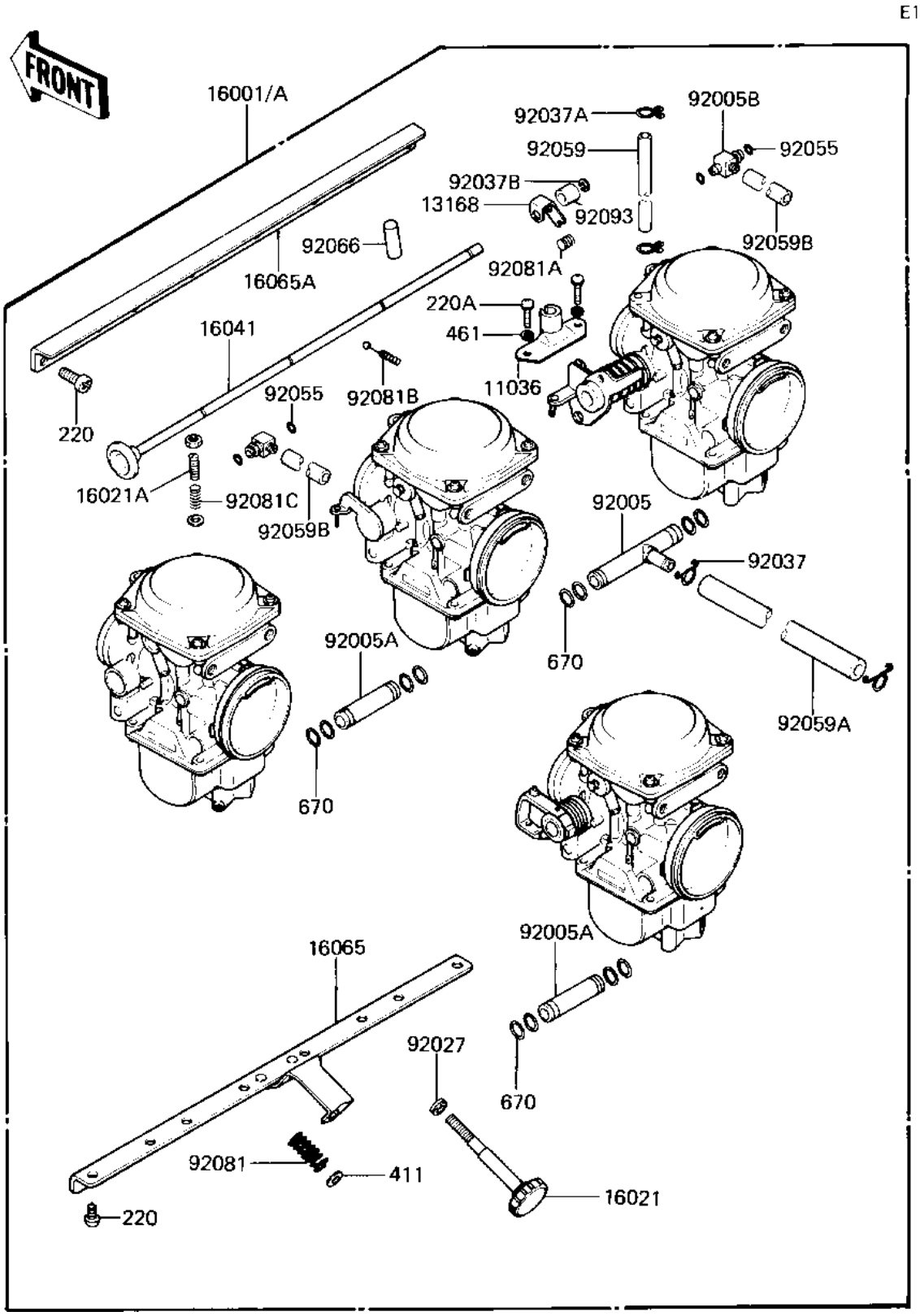

© 2026 Kawasaki Motors Corp., U.S.A.

1983 GPz

PARTS LIST

CARBURETOR ASSY

Kawasaki
Let the Good Times Roll®

ITEM NAME	PART NUMBER	QUANTITY
BRACKET-A (Ref # 11036)	11036-1453	4
LEVER (Ref # 13168)	13168-1110	4
CARBURETOR (Ref # 16001)	16001-1510	1
CARBURETOR (Canada) (Ref # 16001A)	16001-1511	1
SCREW-THROTTLE STOP (Ref # 16021)	16021-1038	1
SCREW-THROTTLE STOP (Ref # 16021A)	16021-1043	3
SHAFT-CARBURETOR,STAR (Ref # 16041)	16041-1027	1
HOLDER-CARBURETOR (Ref # 16065)	16065-1057	1
HOLDER-CARBURETOR (Ref # 16065A)	16065-1058	1
FITTING FUEL T-TYPE (Ref # 92005)	92005-1020	1
JOINT,FUEL (Ref # 92005A)	92005-1021	2
FITTING (Ref # 92005B)	92005-1058	2
COLLAR,STOP SCREW (Ref # 92027)	92027-1432	1
CLAMP,FUEL HOSE (Ref # 92037)	92037-1158	2
CLAMP,TUBE (Ref # 92037A)	92037-1378	2
CLAMP (Ref # 92037B)	92037-1302	4
RING-O (Ref # 92055)	92055-1134	4
TUBE,5X9X220 (Ref # 92059)	92059-1260	1
TUBE (Ref # 92059A)	92059-1214	1
TUBE (Ref # 92059B)	92059-1215	2
RUBBER PLUG (Ref # 92066)	92068-006	1
RUBBER PLUG (Ref # 92066)	92068-006	3
SPRING,ADJUST SCREW (Ref # 92081)	92081-1193	1
SPRING (Ref # 92081A)	92081-1439	4
SPRING,SHAFT STOP (Ref # 92081B)	92081-1440	1
SPRING (Ref # 92081C)	92081-1442	3
SEAL (Ref # 92093)	92093-1074	4
SCREW PAN HEAD 6X14 (Ref # 220)	220B0614	16
SCREW-PAN-CROS,4X18 (Ref # 220A)	220C0418A	2

© 2026 Kawasaki Motors Corp., U.S.A.

1983 GPz

PARTS LIST

CARBURETOR ASSY

ITEM NAME	PART NUMBER	QUANTITY
WASHER PLAIN 6MM (Ref # 411)	411B0600	1
WASHER-SPRING (Ref # 461)	461K0400	2
"O" RING,7MM (Ref # 670)	670B1507	12

© 2026 Kawasaki Motors Corp., U.S.A.