1983 GPz

PARTS DIAGRAM

ENGINE COVERS

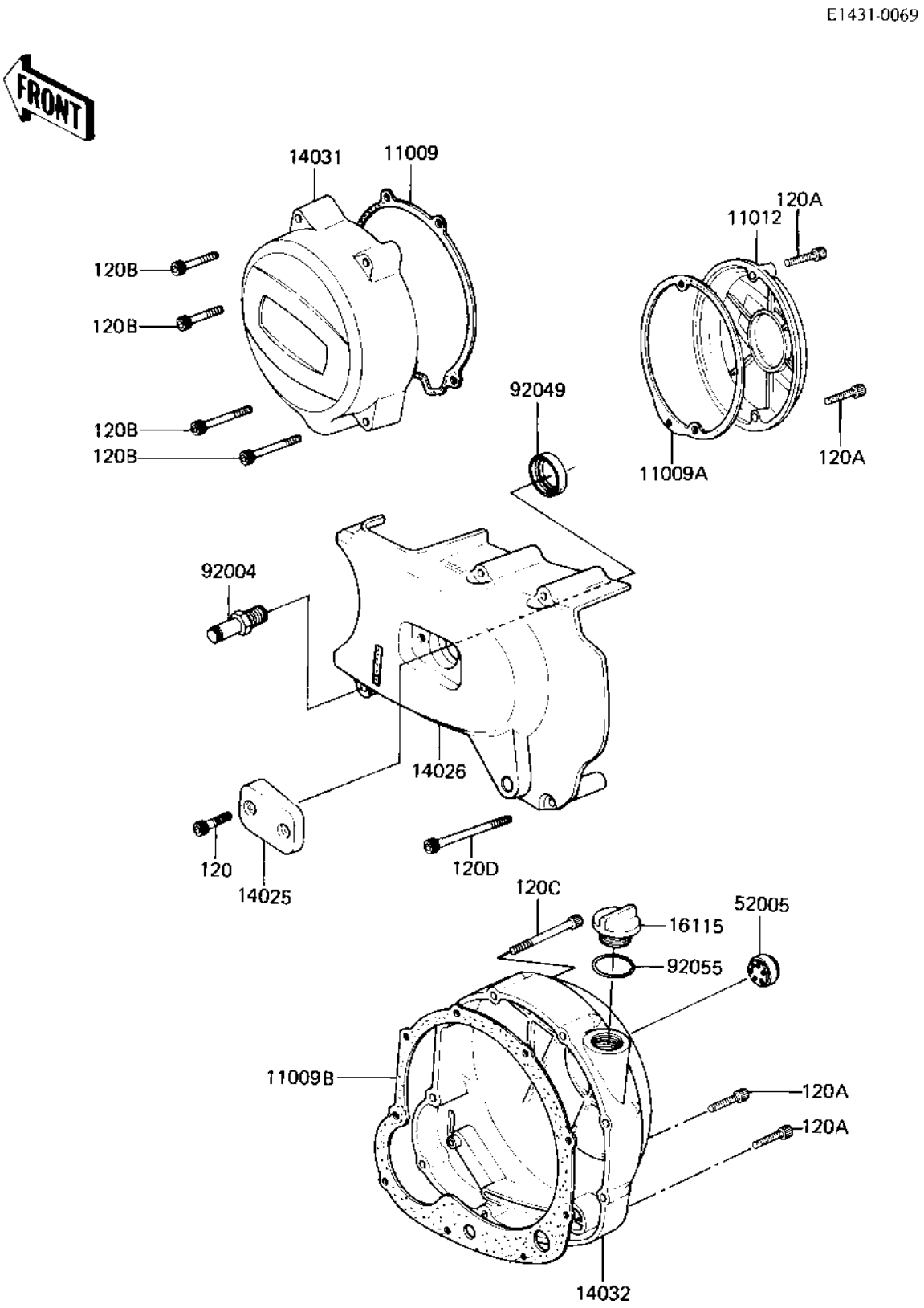

© 2026 Kawasaki Motors Corp., U.S.A.

1983 GPz

PARTS LIST

ENGINE COVERS

Kawasaki
Let the Good Times Roll®

ITEM NAME	PART NUMBER	QUANTITY
GASKET,GENERATOR COVE (Ref # 11009)	11060-1055	1
GASKET,PULSING COIL C (Ref # 11009A)	11060-1053	1
GASKET,CLUTCH COVER (Ref # 11009B)	11060-1054	1
CAP,PULSING COIL,BLAC (Ref # 11012)	11012-1214	1
COVER,CLUTCH RELEASES (Ref # 14025)	14025-1409	1
COVER-CHAIN,BLACK (Ref # 14026)	14026-1062	1
COVER-GENERATOR,BLACK (Ref # 14031)	14031-1078	1
COVER-CLUTCH,BLACK (Ref # 14032)	14032-1072	1
CAP-OIL FILLER (Ref # 16115)	16115-1009	1
GAUGE,OIL LEVEL (Ref # 52005)	52005-1009	1
STUD,CHANGE LEVER PIV (Ref # 92004)	92004-1038	1
OIL SEAL,CLUTCH RELES (Ref # 92049)	92049-1003	1
"0" RING,31MM (Ref # 92055)	92055-049	1
BOLT-SOCKET,6X20 (Ref # 120)	120S0620	2
BOLT,SOCKET,6X30,BLAC (Ref # 120A)	120S0630	9
BOLT-SOCKET,6X40 (Ref # 120B)	120S0640	4
BOLT-SOCKET,6X60 (Ref # 120C)	120S0660	2
BOLT-SOCKET,6X70,BLAC (Ref # 120D)	120S0670	4

© 2026 Kawasaki Motors Corp., U.S.A.