1983 GPz

PARTS DIAGRAM

CRANKCASE BOLT & STUD PATTERN

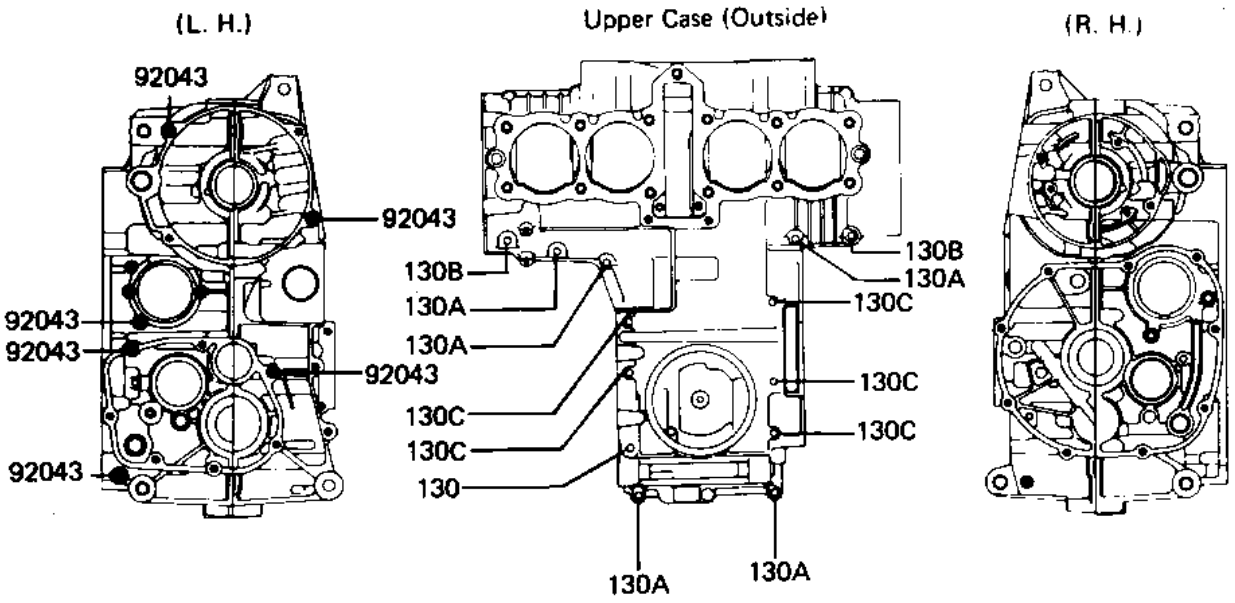

Lower Case (Outside)

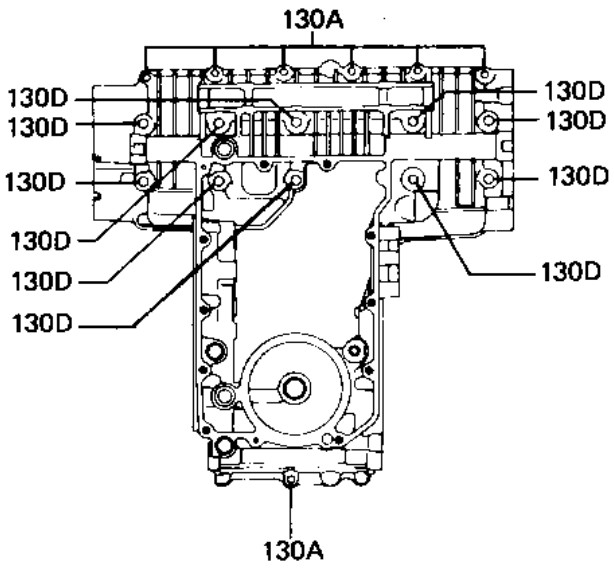

Upper Case (Inside)

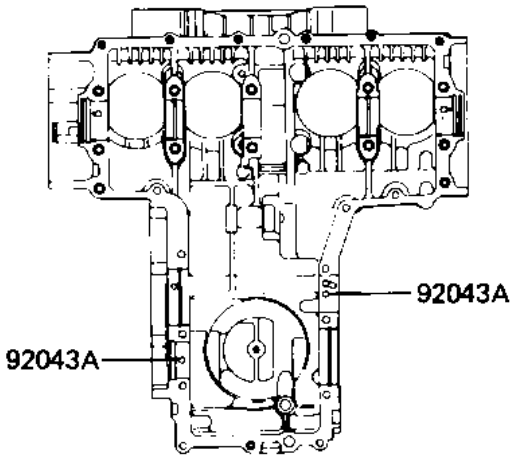

© 2026 Kawasaki Motors Corp., U.S.A.

1983 GPz

PARTS LIST

CRANKCASE BOLT & STUD PATTERN

ITEM NAME	PART NUMBER	QUANTITY
PIN-DOWEL (Ref # 92043)	92042-007	6
PIN DOWEL 6MM (Ref # 92043A)	92042-016	2
BOLT-FLANGED,6X105,BL (Ref # 130)	130J06105	1
BOLT-FLANGED,6X40,BLA (Ref # 130A)	130J0640	12
BOLT-FLANGED,6X55,BLA (Ref # 130B)	130J0655	2
BOLT-FLANGED,6X95,BLA (Ref # 130C)	130J0695	5
BOLT-FLANGED,8X95 (Ref # 130D)	130P0895	10

© 2026 Kawasaki Motors Corp., U.S.A.