1983 GPz

PARTS DIAGRAM

CYLINDER HEAD COVER

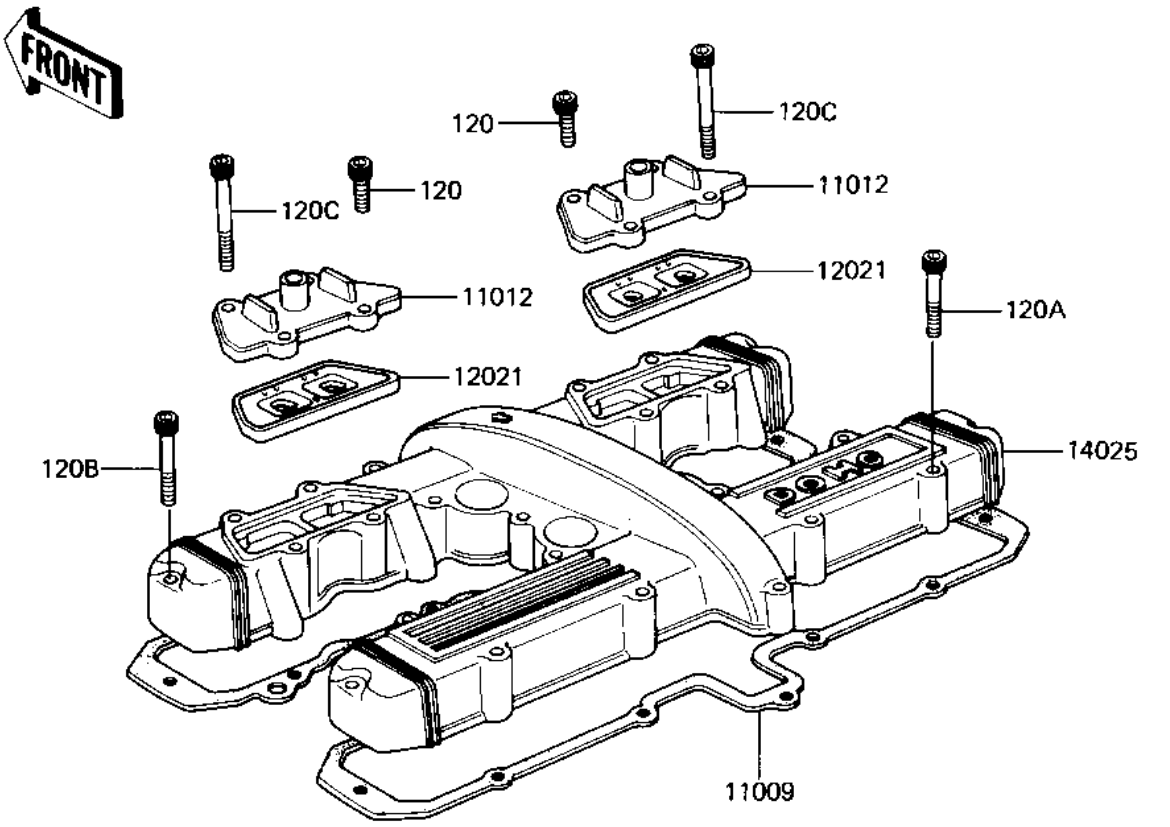

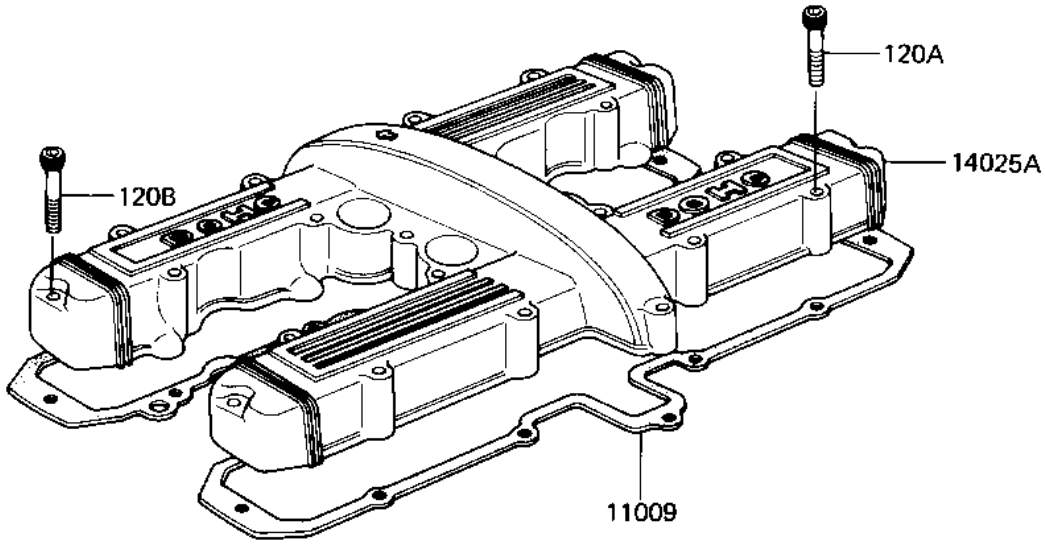

© 2026 Kawasaki Motors Corp., U.S.A.

1983 GPz

PARTS LIST

CYLINDER HEAD COVER

ITEM NAME	PART NUMBER	QUANTITY
GASKET,CYLINDER HEAD (Ref # 11009)	11009-1280	1
CAP (Ref # 11012)	11012-1213	2
VALVE ASSY REED (Ref # 12021)	12021-1003	2
COVER,CYLINDER HEAD (Ref # 14025)	14025-1403	1
COVER (Canada) (Ref # 14025A)	14025-1404	1
BOLT-SOCKET,6X20 (Ref # 120)	120S0620	4
BOLT-SOCKET,6X35,BLAC (Ref # 120A)	120S0635	16
BOLT-SOCKET,6X35,BLAC (Ref # 120A)	120S0635	20
BOLT-SOCKET,6X45,BLAC (Ref # 120B)	120S0645	4
BOLT-SOCKET,6X65,BLAC (Ref # 120C)	120S0665	4

© 2026 Kawasaki Motors Corp., U.S.A.