1982 CSR Belt

PARTS DIAGRAM

FUEL TANK

F2410-0032

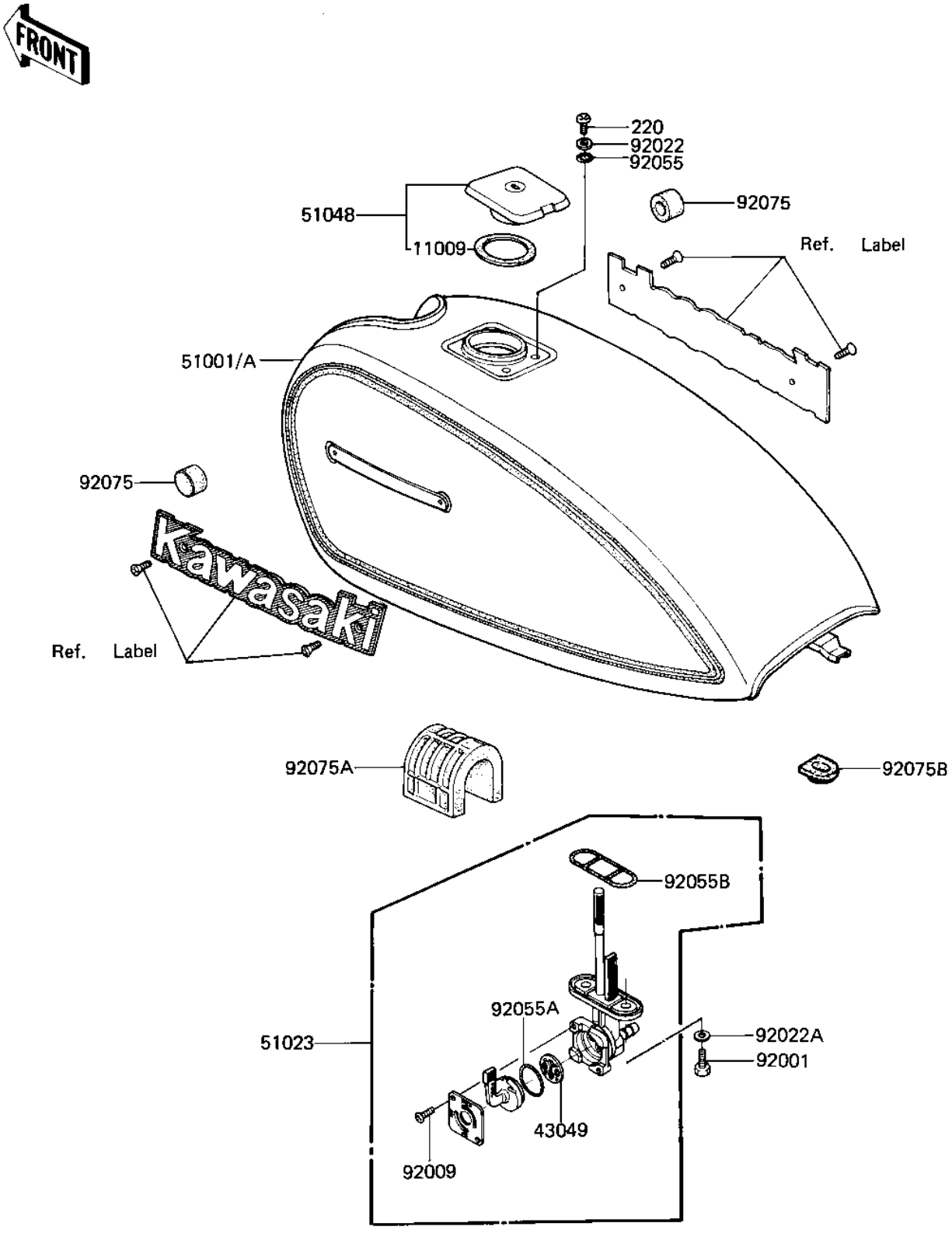

© 2026 Kawasaki Motors Corp., U.S.A.

1982 CSR Belt

PARTS LIST

FUEL TANK

ITEM NAME	PART NUMBER	QUANTITY
GASKET,FUEL TANK CAP (Ref # 11009)	11009-1051	1
PACKING,FUEL TAP VALV (Ref # 43049)	43049-1017	1
TANK-FUEL,L.M.RED (Ref # 51001)	51001-1058-E2	1
TANK-FUEL,EBONY (Ref # 51001A)	51001-5121-8G	1
TAP-ASSY,FUEL (Ref # 51023)	51023-1038	1
CAP ASSY TANK (Ref # 51048)	51048-1018	1
BOLT,6X20,FUEL TAP (Ref # 92001)	92001-1091	2
SCREW PAN HEAD 3X5 (Ref # 92009)	220B0305A	2
WASHER,PLAIN (Ref # 92022)	92022-1038	2
WASHER-PLAIN (Ref # 92022A)	92022-183	2
"0" RING (Ref # 92055)	92055-1023	2
"0" RING,FUEL TAP LEV (Ref # 92055A)	92055-1111	1
"0" RING,FUEL TANK (Ref # 92055B)	92055-1112	1
DAMPER RUBBER-FL TANK (Ref # 92075)	92075-101	2
DAMPER RUBBER (Ref # 92075A)	92075-284	1
DAMPER RUBBER FUEL TA (Ref # 92075B)	92075-295	1
SCREW PAN HEAD 5X10 (Ref # 220)	220B0510	2

© 2026 Kawasaki Motors Corp., U.S.A.