1982 CSR Belt

PARTS DIAGRAM

GEAR CHANGE MECHANISM

E1370-0022

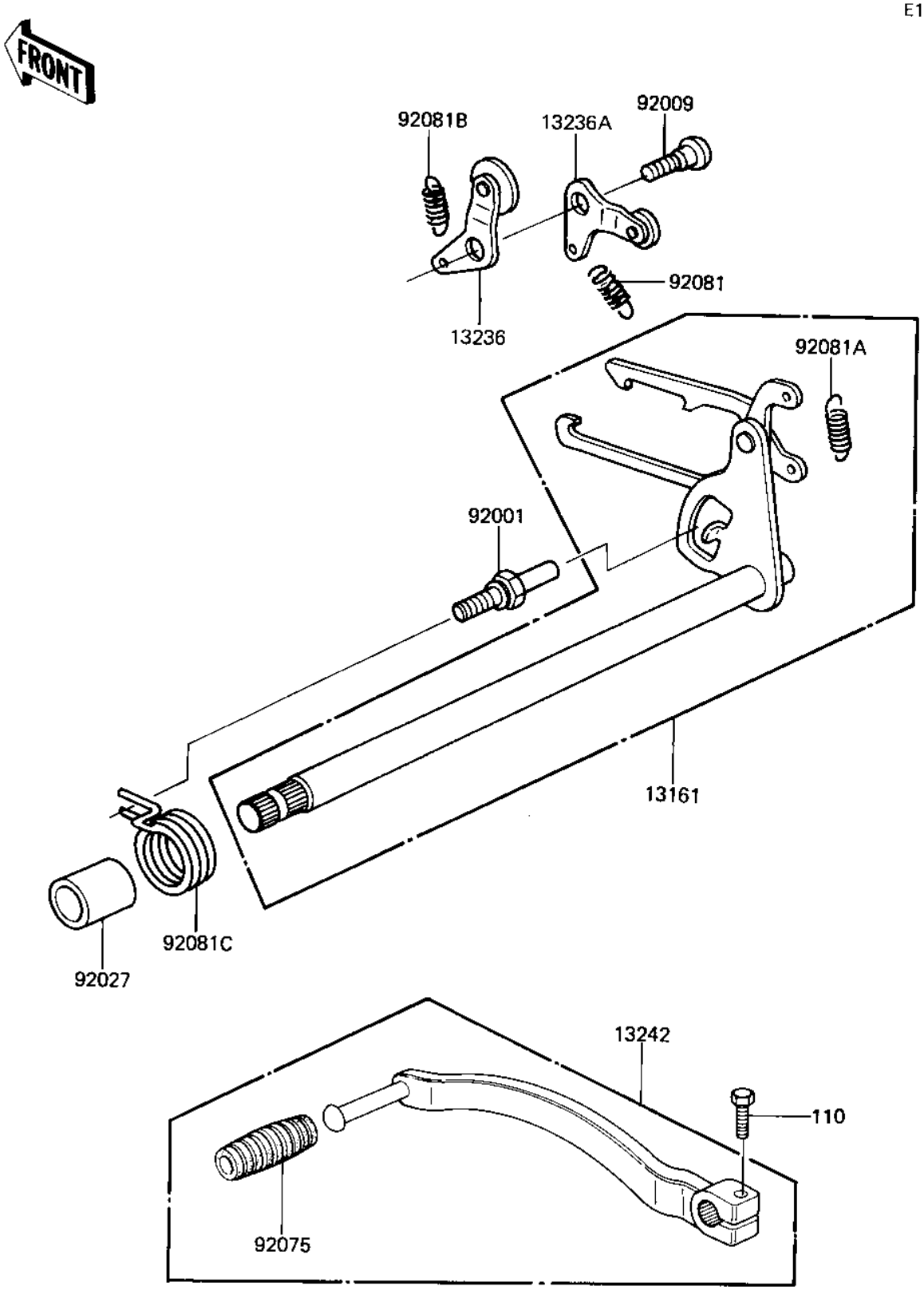

© 2026 Kawasaki Motors Corp., U.S.A.

1982 CSR Belt

PARTS LIST

GEAR CHANGE MECHANISM

ITEM NAME	PART NUMBER	QUANTITY
LEVER-COMP-CHANGE SHA (Ref # 13161)	13161-1007	1
LEVER ASSY,GEAR POSIT (Ref # 13236)	13236-1037	1
LEVER-COMP,NEUTRAL (Ref # 13236A)	13236-1038	1
LEVER-ASSY-CHANGE,PED (Ref # 13242)	13242-1038	1
BOLT,RETURN SPRING (Ref # 92001)	92001-1401	1
SCREW-PAN HEAD (Ref # 92009)	92011-023	1
COLLAR,13X18.3X21.5 (Ref # 92027)	92027-1440	1
DAMPER,CHANGE PEDAL (Ref # 92075)	92160-1036	1
SPRING CHNG DRUM LEV (Ref # 92081)	92081-051	1
SPRING-CHANGE LEVER (Ref # 92081A)	92081-076	1
SPRING,GEAR POSITION (Ref # 92081B)	92081-1354	1
SPRING,GEAR CHANGE (Ref # 92081C)	92083-031	1
BOLT-UPSET,6X20 (Ref # 110)	112G0620	1

© 2026 Kawasaki Motors Corp., U.S.A.