1981 KX80

PARTS DIAGRAM

LABELS

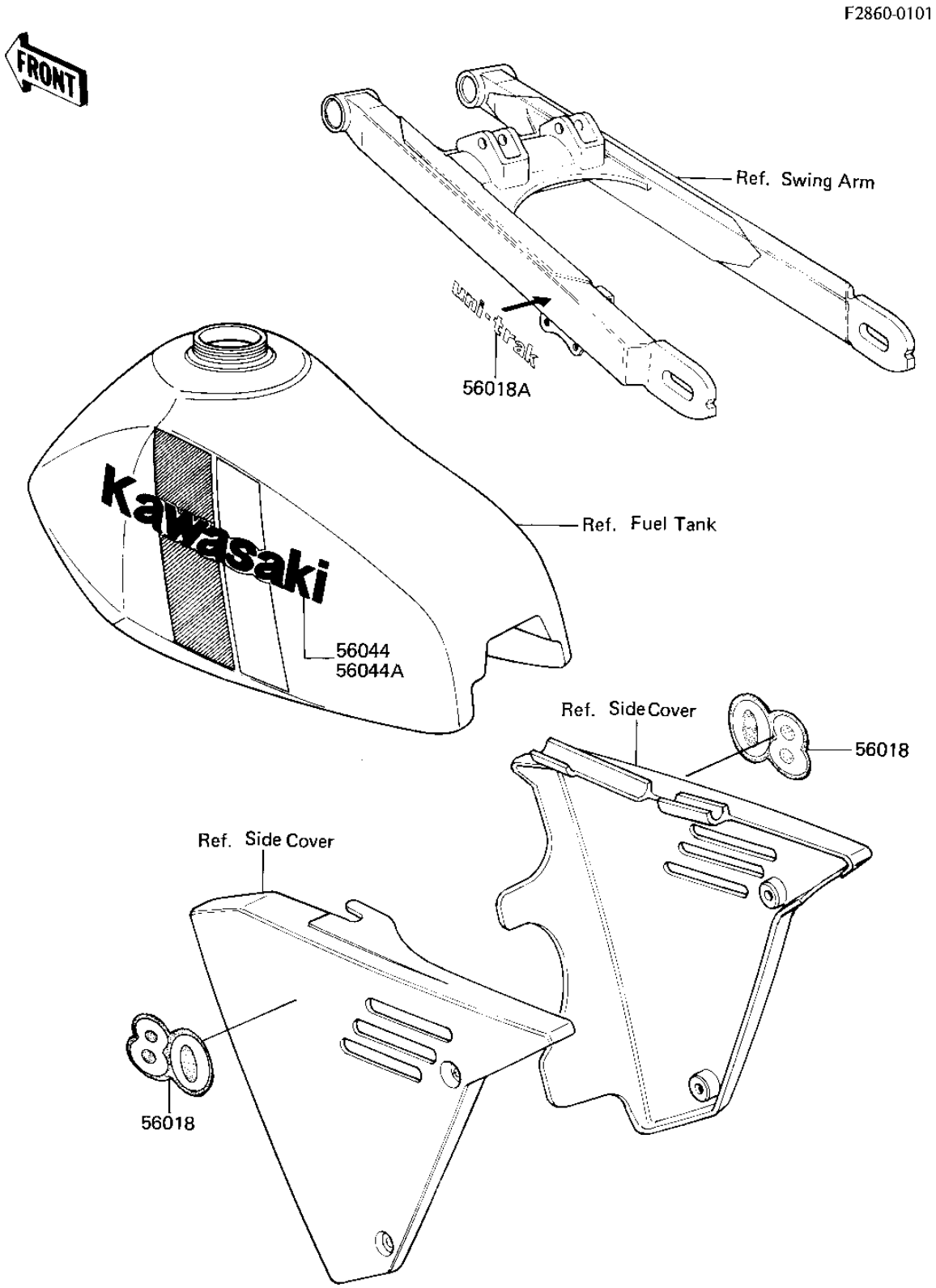

© 2026 Kawasaki Motors Corp., U.S.A.

1981 KX80

PARTS LIST

LABELS

ITEM NAME	PART NUMBER	QUANTITY
MARK,SIDE COVER (Ref # 56018)	56018-1137	2
MARK,SWGARM,UNI-TRAK (Ref # 56018A)	56018-1286	2
PATTERN A TANK LH (Ref # 56044)	56044-1231	1
PATTERN A TANK RH (Ref # 56044A)	56044-1232	1

© 2026 Kawasaki Motors Corp., U.S.A.