1981 KX80

PARTS DIAGRAM

HANDLEBAR ('82 KX80-C2)

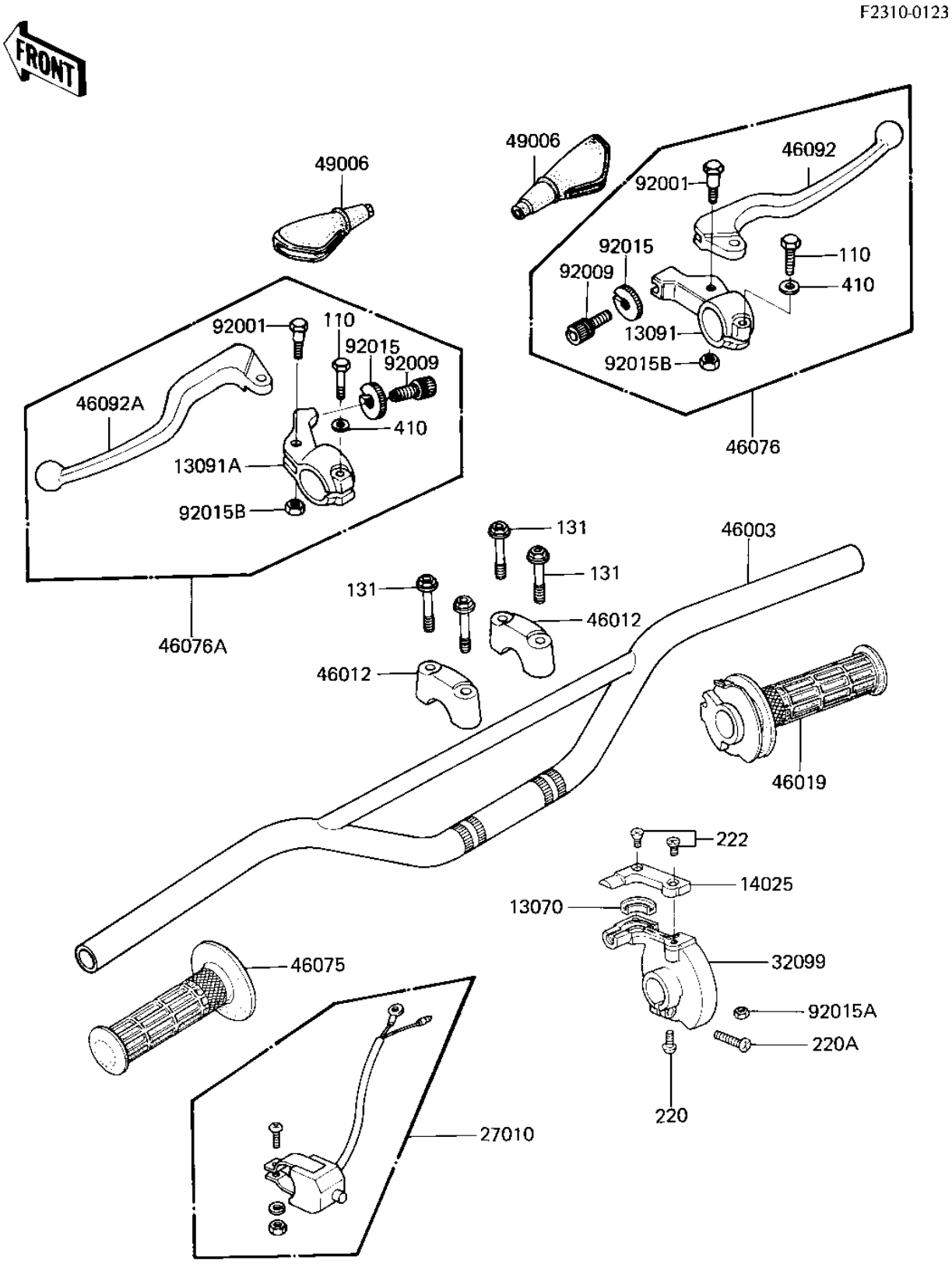

© 2026 Kawasaki Motors Corp., U.S.A.

1981 KX80

PARTS LIST

HANDLEBAR ('82 KX80-C2)

ITEM NAME	PART NUMBER	QUANTITY
GUIDE,THROTTLE PEACE (Ref # 13070)	13070-1053	1
HOLDER,FR LEVER,F.BLK (Ref # 13091)	46060-011-21	1
HOLDER,CL LEVER,F.BLK (Ref # 13091A)	46094-015-21	1
COVER,THROTTLE UPP,RH (Ref # 14025)	14025-1392	1
SWITCH,ASSY,ENG STOP (Ref # 27010)	27010-1018	1
CASE,THROTTLE LWR,RH (Ref # 32099)	32099-1024	1
HANDLEBAR (Ref # 46003)	46003-1092	1
HOLDER-HANDLEBAR (Ref # 46012)	46012-008	2
GRIP-ASSY,THROTTLE (Ref # 46019)	46019-1020	1
GRIP,LH (Ref # 46075)	46075-1024	1
LEVER ASSY,FRONT BRK (Ref # 46076)	46076-1010	1
LEVER ASSY,CLUTCH (Ref # 46076A)	46076-1011	1
LEVER,FRONT BRAKE (Ref # 46092)	46092-1014	1
LEVER,CLUTCH (Ref # 46092A)	46092-1015	1
BOOTS,LEVER HOLDER (Ref # 49006)	49006-1017	2
BOLT,HEX HEAD,5X22 (Ref # 92001)	92007-046	2
SCREW CABLE ADJUST (Ref # 92009)	46055-003	2
NUT-LOCK (Ref # 92015)	46056-005	2
NUT,LOCK,4MM (Ref # 92015A)	92019-010	1
NUT-LOCK,5MM (Ref # 92015B)	92019-014	2
BOLT HEX HEAD 6X25 (Ref # 110)	110N0625	2
BOLT,FLANGED,8X35 (Ref # 131)	130G0835	4
SCREW PAN HEAD 4X8 (Ref # 220)	220B0408	1
SCREW PAN HEAD 5X20 (Ref # 220A)	220B0520	1
SCREW-CSK-RD-CROS, 4 X 12 (Ref # 222)	222E0412A	2
WASHER,PLAIN,6MM (Ref # 410)	410D0600	2

© 2026 Kawasaki Motors Corp., U.S.A.