1981 KX80

PARTS DIAGRAM

STAND

F2190-0061



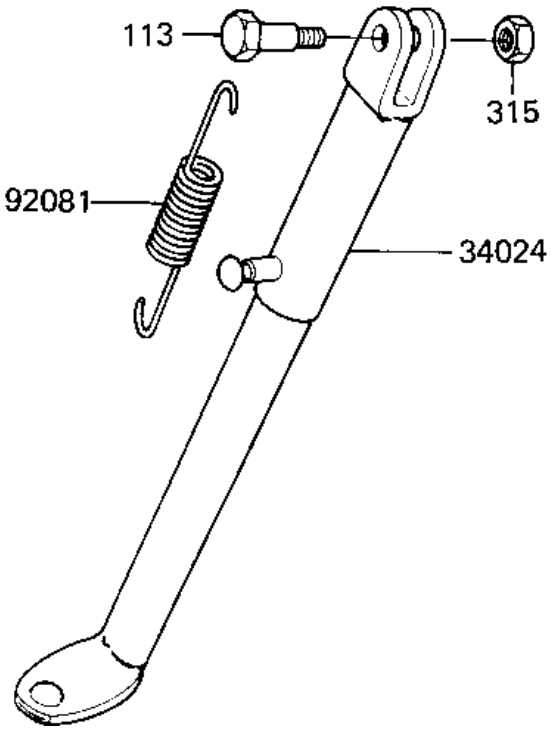

© 2026 Kawasaki Motors Corp., U.S.A.

1981 KX80

PARTS LIST

STAND

ITEM NAME	PART NUMBER	QUANTITY
STAND-SIDE (Ref # 34024)	34024-1053	1
SPRING,SIDE STAND (Ref # 92081)	34025-005	1
BOLT-UPSET,10X30 (Ref # 113)	112G1030	1
NUT 10MM (Ref # 315)	315B1000	1

© 2026 Kawasaki Motors Corp., U.S.A.