1981 KX80

PARTS DIAGRAM

MUFFLER ('82 KX80-C2)

ET140-0080

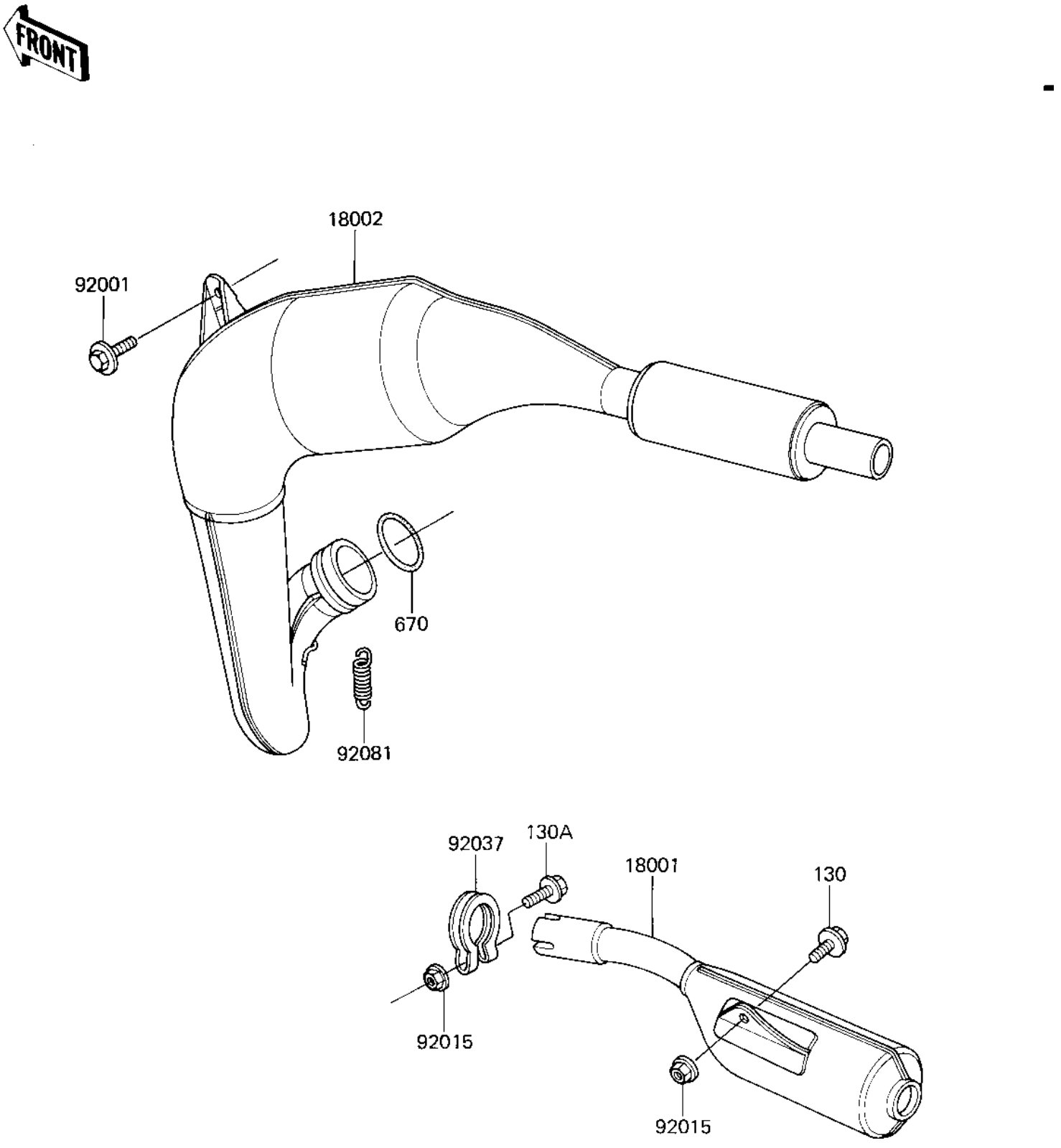

© 2026 Kawasaki Motors Corp., U.S.A.

1981 KX80

PARTS LIST

MUFFLER ('82 KX80-C2)

ITEM NAME	PART NUMBER	QUANTITY
MUFFLER,F.BLACK (Ref # 18001)	18001-1258	1
BODY-COMP-MUFFLER,F.B (Ref # 18002)	18002-1208	1
BOLT,W/WASHER,6X12 (Ref # 92001)	92001-1517	1
NUT-6MM (Ref # 92015)	92015-1078	2
CLAMP (Ref # 92037)	92037-1150	1
SPRING-CONNECTOR (Ref # 92081)	18071-003	1
BOLT,FLANGED,6X12 (Ref # 130)	130G0612	1
BOLT,FLANGED,6X30 (Ref # 130A)	130G0630	1
"0" RING,36M/M (Ref # 670)	670E3036	1

© 2026 Kawasaki Motors Corp., U.S.A.