1981 KX80

PARTS DIAGRAM

CLUTCH ('82 KX80-C2)

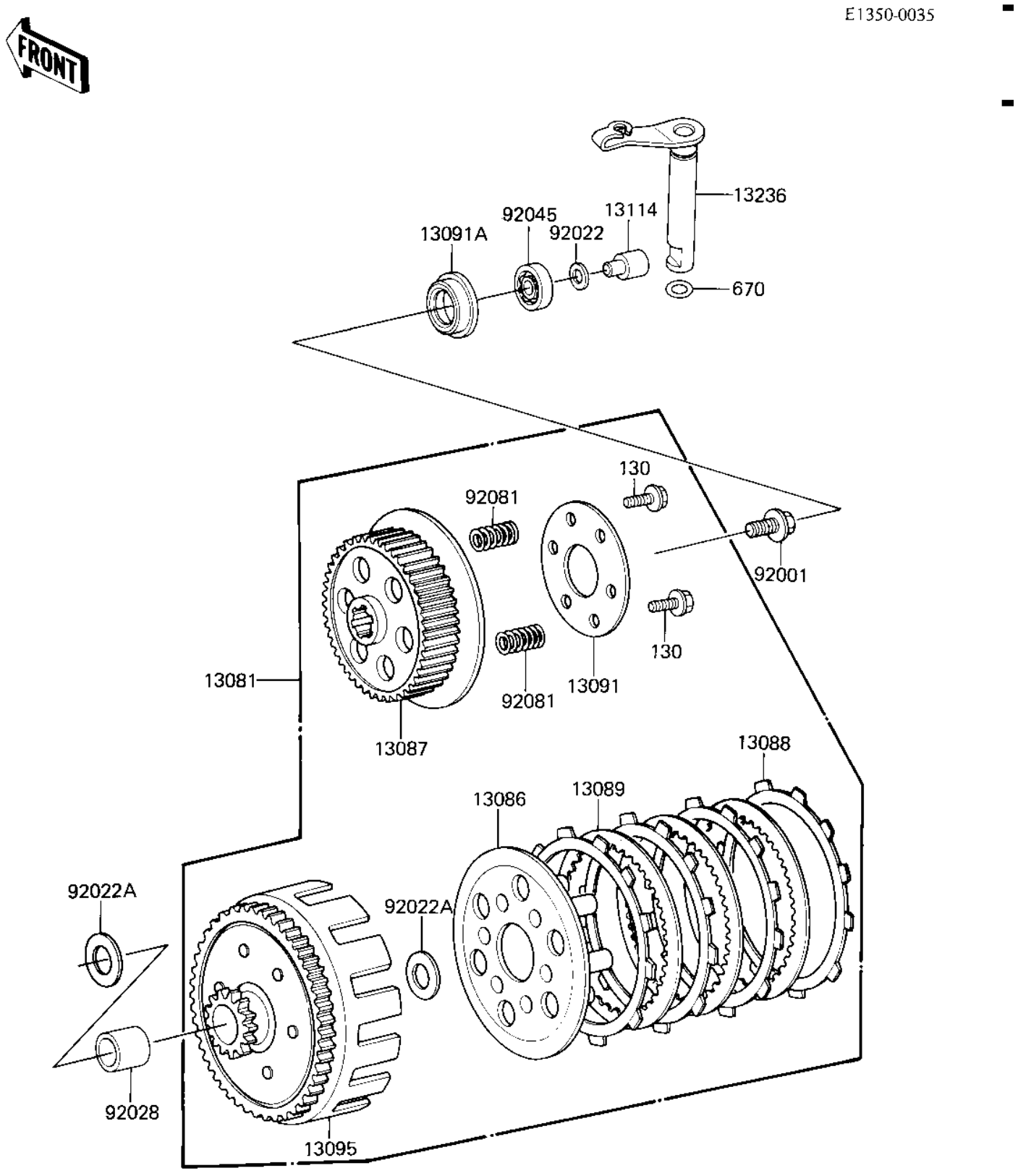

© 2026 Kawasaki Motors Corp., U.S.A.

1981 KX80

PARTS LIST

CLUTCH ('82 KX80-C2)

ITEM NAME	PART NUMBER	QUANTITY
CLUTCH-ASSY (Ref # 13081)	13081-1078	1
WHEEL,CLUTCH (Ref # 13086)	13086-1002	1
HUB-CLUTCH (Ref # 13087)	13087-1051	1
PLATE,CLUTCH FRICTION (Ref # 13088)	13088-1010	5
PLATE-CLUTCH,STEEL (Ref # 13089)	13089-1009	4
HOLDER,CLUTCH SPRING (Ref # 13091)	13091-1115	1
HOLDER,CLUTCH PUSHER (Ref # 13091A)	13091-1133	1
HOUSING,CLUTCH (Ref # 13095)	13095-1044	1
PUSHER,CLUTCH (Ref # 13114)	13114-1008	1
LEVER,CLUTCH RELEASE (Ref # 13236)	13236-1025	1
BOLT,10X14 (Ref # 92001)	92001-1433	1
WASHER,17.3X28X1.0 (Ref # 92022A)	92022-255	2
BUSHING,17X22X21.1 (Ref # 92028)	92028-1149	1
BEARING,BALL #627 (Ref # 92045)	92045-026	1
SPRING,CLUTCH (Ref # 92081)	92081-1175	6
BOLT-FLANGED (Ref # 130)	130P0520	6
"O" RING,9MM (Ref # 670)	670B1509	1

© 2026 Kawasaki Motors Corp., U.S.A.