1981 KX80

PARTS DIAGRAM

FRONT FORK

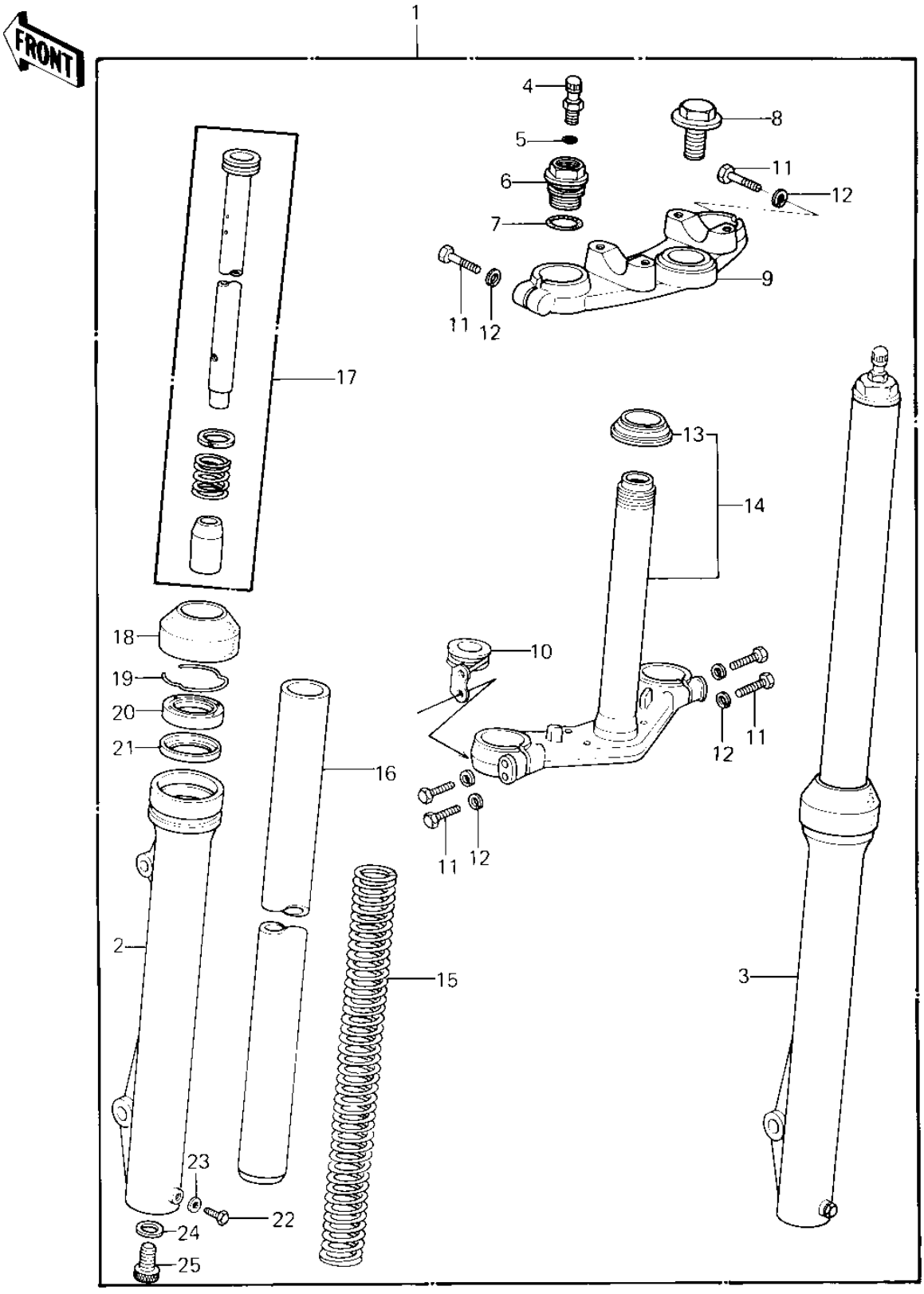

© 2026 Kawasaki Motors Corp., U.S.A.

1981 KX80

PARTS LIST

FRONT FORK

ITEM NAME	PART NUMBER	QUANTITY
FORK-FRONT (Ref # 1)	44001-1259	1
TUBE,LH,FORK OUTER (Ref # 2)	44005-1065	1
TUBE,RH,FORK OUTER (Ref # 3)	44006-1065	1
VALVE ASSY,AIR (Ref # 4)	16126-1025	2
"0" RING,AIR VALVE (Ref # 5)	92055-1018	2
BOLT, FORK TOP (Ref # 6)	44029-1022	2
"0" RING,FORK TOP BOL (Ref # 7)	92055-1101	2
BOLT,STEERING STEM (Ref # 8)	92001-1318	1
HEAD STEERING STEM (Ref # 9)	44039-1041	1
CLAMP,CABLE (Ref # 10)	92072-1039	1
BOLT,HEX HEAD,8X40 (Ref # 11)	92001-1063	6
WASHER SPRING 8MM (Ref # 12)	461F0800	6
CONE STERNG BERG LOW (Ref # 13)	92047-010	1
STEM,STEERING (Ref # 14)	44037-1037	1
SPRING,FORK,INNER (Ref # 15)	44026-1096	2
TUBE,FORK INNER (Ref # 16)	44013-1054	2
CYLINDER-FORK (Ref # 17)	44022-1050	2
DUST SHIELD (Ref # 18)	92093-1054	2
CIRCLIP (Ref # 19)	92033-1062	2
OIL SEAL (Ref # 20)	92049-1069	2
SPACER,FORK OUTER (Ref # 21)	92026-1041	2
BOLT HEX HEAD 6X8 (Ref # 22)	110B0608	2
GASKET,DRAIN PLUG (Ref # 23)	44045-047	2
GASKET,FORK CYL BOLT (Ref # 24)	44045-051	2
BOLT,FORK CYLINDER (Ref # 25)	44041-078	2

© 2026 Kawasaki Motors Corp., U.S.A.