1981 KX80

PARTS DIAGRAM

MUFFLER ('81 KX80-C1)

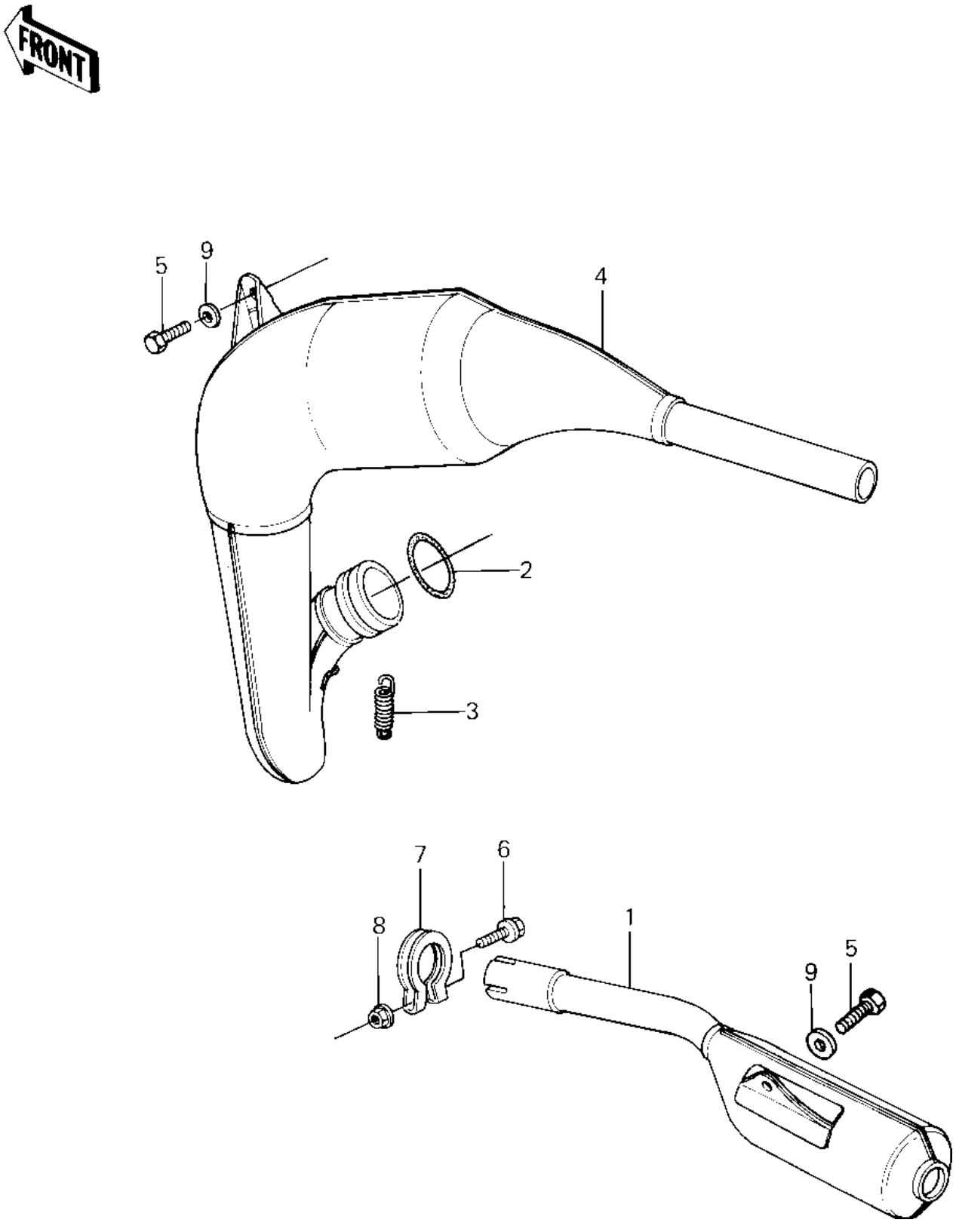

© 2026 Kawasaki Motors Corp., U.S.A.

1981 KX80

PARTS LIST

MUFFLER ('81 KX80-C1)

ITEM NAME	PART NUMBER	QUANTITY
MUFFLER ASSY (Ref # 1)	18001-1167	1
"0" RING,36M/M (Ref # 2)	670E3036	1
SPRING-CONNECTOR (Ref # 3)	18071-003	1
MUFFLER BODY (Ref # 4)	18002-1125	1
BOLT,FLANGED,6X12 (Ref # 5)	130G0612	2
BOLT,FLANGED,6X30 (Ref # 6)	130G0630	1
CLAMP (Ref # 7)	92037-1150	1
NUT-6MM (Ref # 8)	92015-1078	1
WASHER 6.5X20X1.6T (Ref # 9)	92022-125	2

© 2026 Kawasaki Motors Corp., U.S.A.