1981 KX80

PARTS DIAGRAM

GEAR CHANGE MECHANISM ('81 KX80-C1)

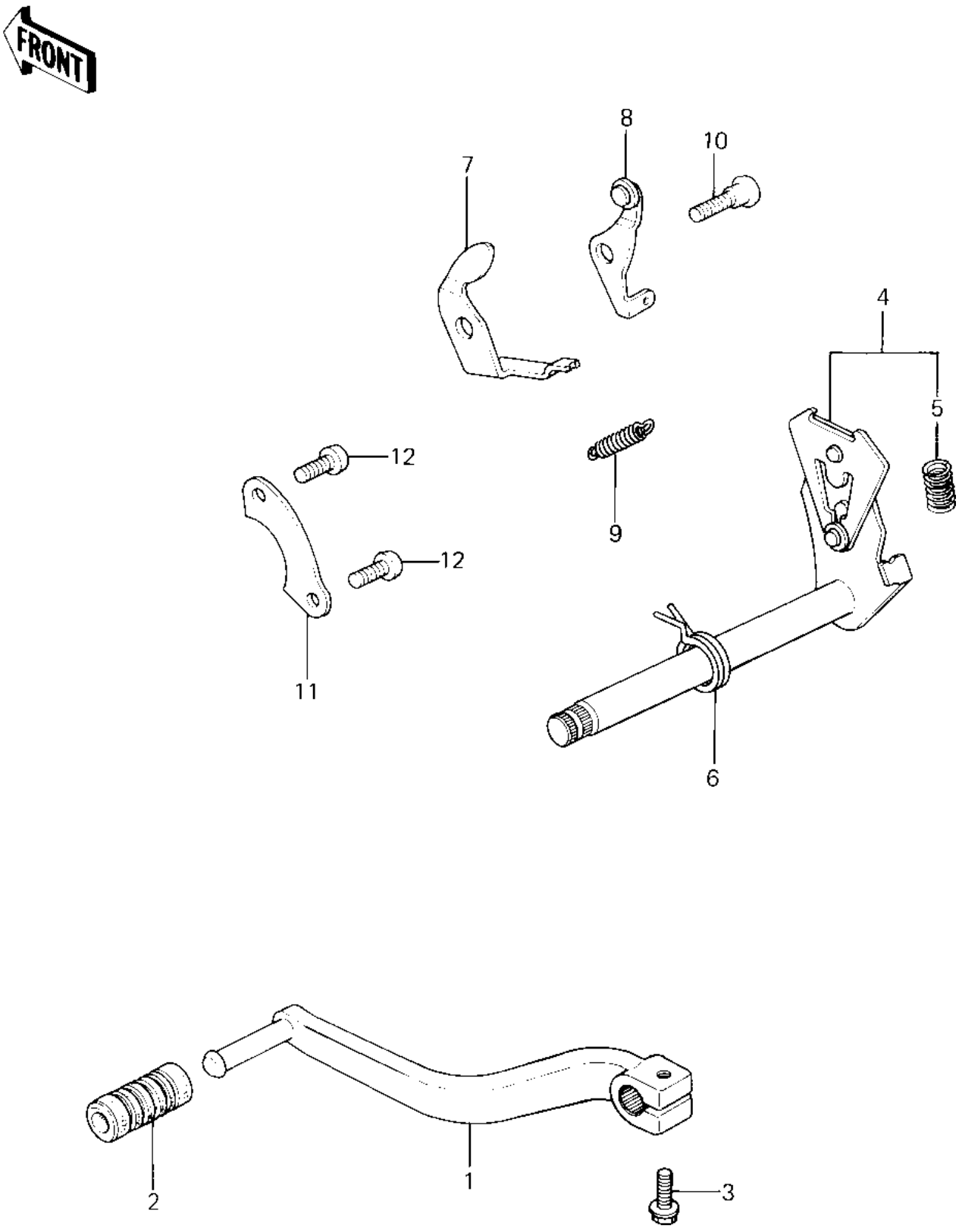

© 2026 Kawasaki Motors Corp., U.S.A.

1981 KX80

PARTS LIST

GEAR CHANGE MECHANISM ('81 KX80-C1)

ITEM NAME	PART NUMBER	QUANTITY
PEDAL,GEAR CHANGE (Ref # 1)	13156-1049	1
DAMPER,CHANGE PEDAL (Ref # 2)	92160-1108	1
BOLT,FLANGED,6X22 (Ref # 3)	92001-1352	1
LEVER-COMP-CHANGE SHA (Ref # 4)	13161-1108	1
SPRING CHANGE LEVER (Ref # 5)	92081-1275	1
SPRING,TENTION (Ref # 6)	92081-1129	1
LEVER,POSITIONING (Ref # 7)	13168-1069	1
LEVER,POSITIONING (Ref # 8)	13236-1026	1
SPRING,CHANGE LEVER (Ref # 9)	92081-1109	1
SCREW,CHANGE LEVER (Ref # 10)	92009-1102	1
PLATE,CHANGE DRUM (Ref # 11)	13169-1309	1
SCREW PAN HEAD 6X14 (Ref # 12)	220B0614	2

© 2026 Kawasaki Motors Corp., U.S.A.