1981 KX80

PARTS DIAGRAM

CYLINDER HEAD/CYLINDER/REED VALVE ('81 K

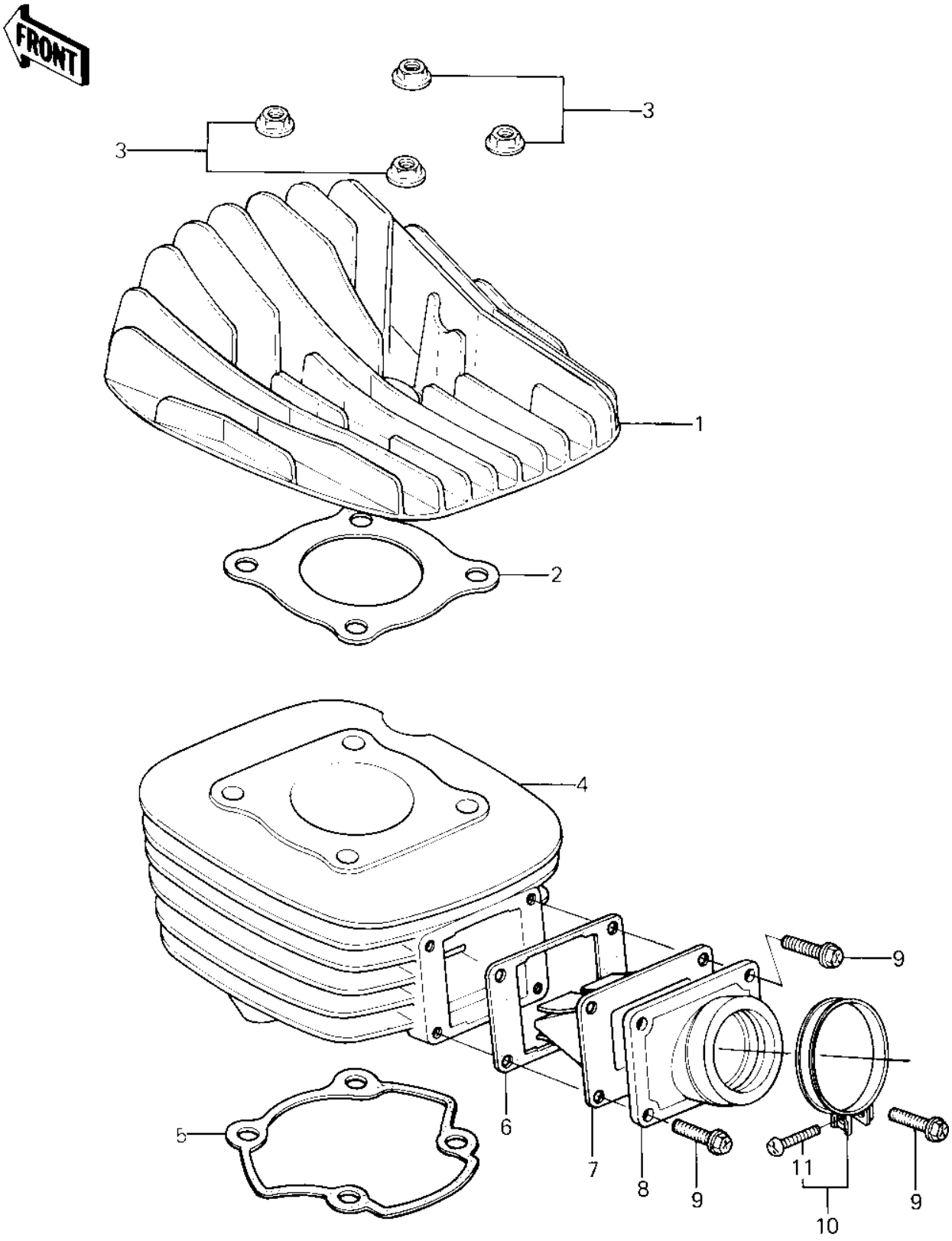

© 2026 Kawasaki Motors Corp., U.S.A.

1981 KX80

PARTS LIST

CYLINDER HEAD/CYLINDER/REED VALVE ('81 K

ITEM NAME	PART NUMBER	QUANTITY
HEAD-CYLINDER (Ref # 1)	11001-1247	1
GASKET,CYLINDER HEAD (Ref # 2)	11004-1031	1
NUT,8M/M (Ref # 3)	92015-1014	4
CYLINDER-ENGINE (Ref # 4)	11005-1182	1
GASKET,CYLINDER BASE (Ref # 5)	11009-1200	1
GASKET,REED VALVE (Ref # 6)	11009-1109	1
VALVE ASSY REEDO (Ref # 7)	12021-1010	1
HOLDER-VALVE-REED (Ref # 8)	12023-1020	1
BOLT,FLANGED,6X20 (Ref # 9)	130G0620	4
CLAMP (Ref # 10)	92037-1172	1
SCREW PAN HEAD 4X25 (Ref # 11)	220B0425	1

© 2026 Kawasaki Motors Corp., U.S.A.