2000 1100 STX D.I.

PARTS DIAGRAM

Crankshaft/Piston(s)

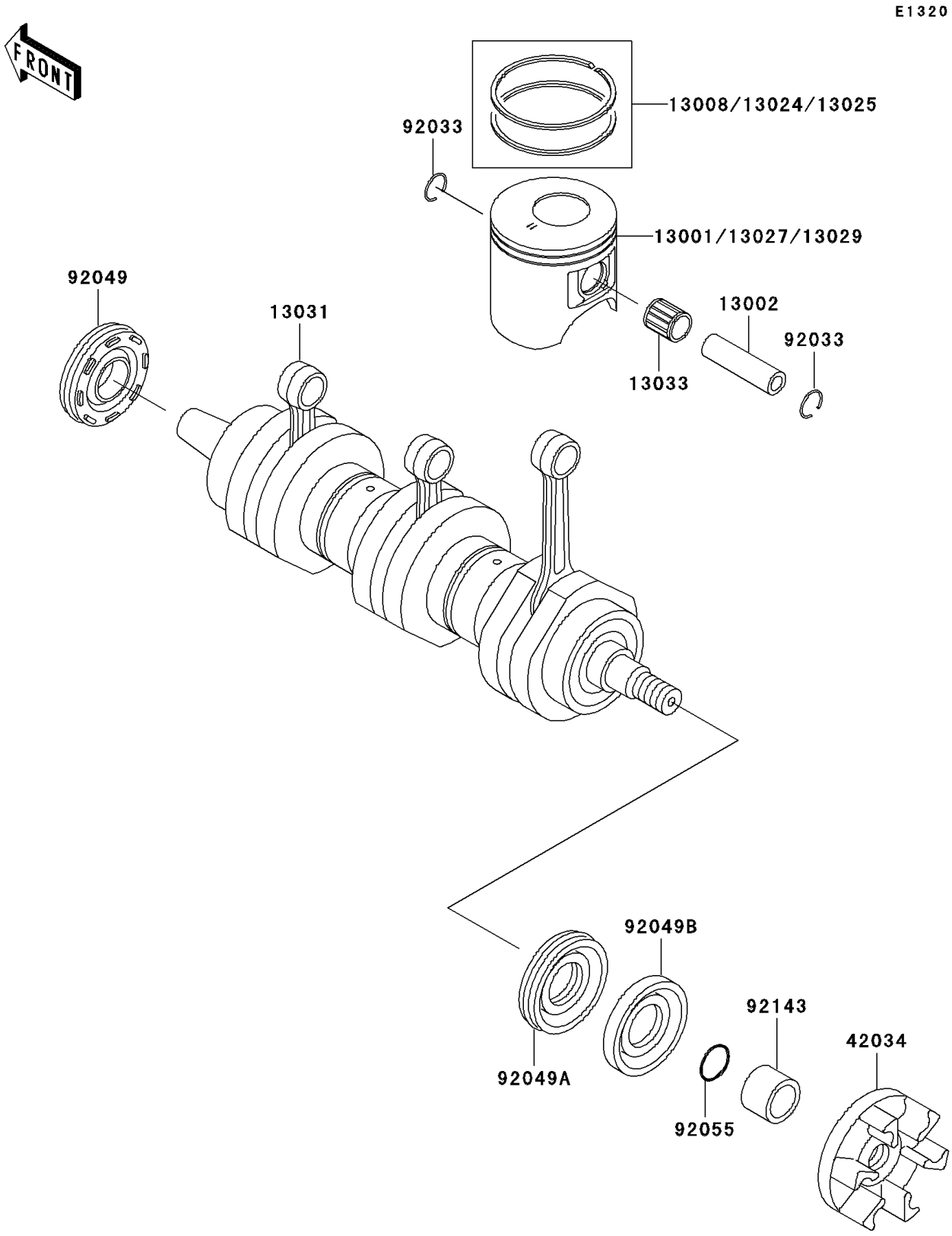

© 2026 Kawasaki Motors Corp., U.S.A.

2000 1100 STX D.I.

PARTS LIST

Crankshaft/Piston(s)

ITEM NAME	PART NUMBER	QUANTITY
PISTON-ENGINE,STD (Ref # 13001)	13001-3734	3
PIN-PISTON (Ref # 13002)	13002-3708	3
RING-SET-PISTON,STD (Ref # 13008)	13008-3708	3
RING-SET-PISTON LL,O/S 1.00 (Ref # 13024)	13024-3706	AR
RING-SET-PISTON L,O/S 0.50 (Ref # 13025)	13025-3706	AR
PISTON-ENGINE LL,O/S 1.00 (Ref # 13027)	13027-3717	AR
PISTON-ENGINE L,O/S 0.50 (Ref # 13029)	13029-3717	AR
CRANKSHAFT-COMP (Ref # 13031)	13031-3731	1
BEARING-SMALL END (Ref # 13033)	13033-3703	3
COUPLING (Ref # 42034)	42034-3709	1
RING-SNAP (Ref # 92033)	92033-3721	6
SEAL-OIL,FWJ7307210ZS (Ref # 92049)	92049-3713	1
SEAL-OIL (Ref # 92049A)	92049-3715	1
SEAL-OIL (Ref # 92049B)	92049-3716	1
RING-O,20.8X2.4 (Ref # 92055)	92055-3740	1
COLLAR (Ref # 92143)	92143-3745	1

© 2026 Kawasaki Motors Corp., U.S.A.