1978 JS440

PARTS DIAGRAM

SPECIAL SERVICE TOOLS ('77-'78 A1/A1A/A2

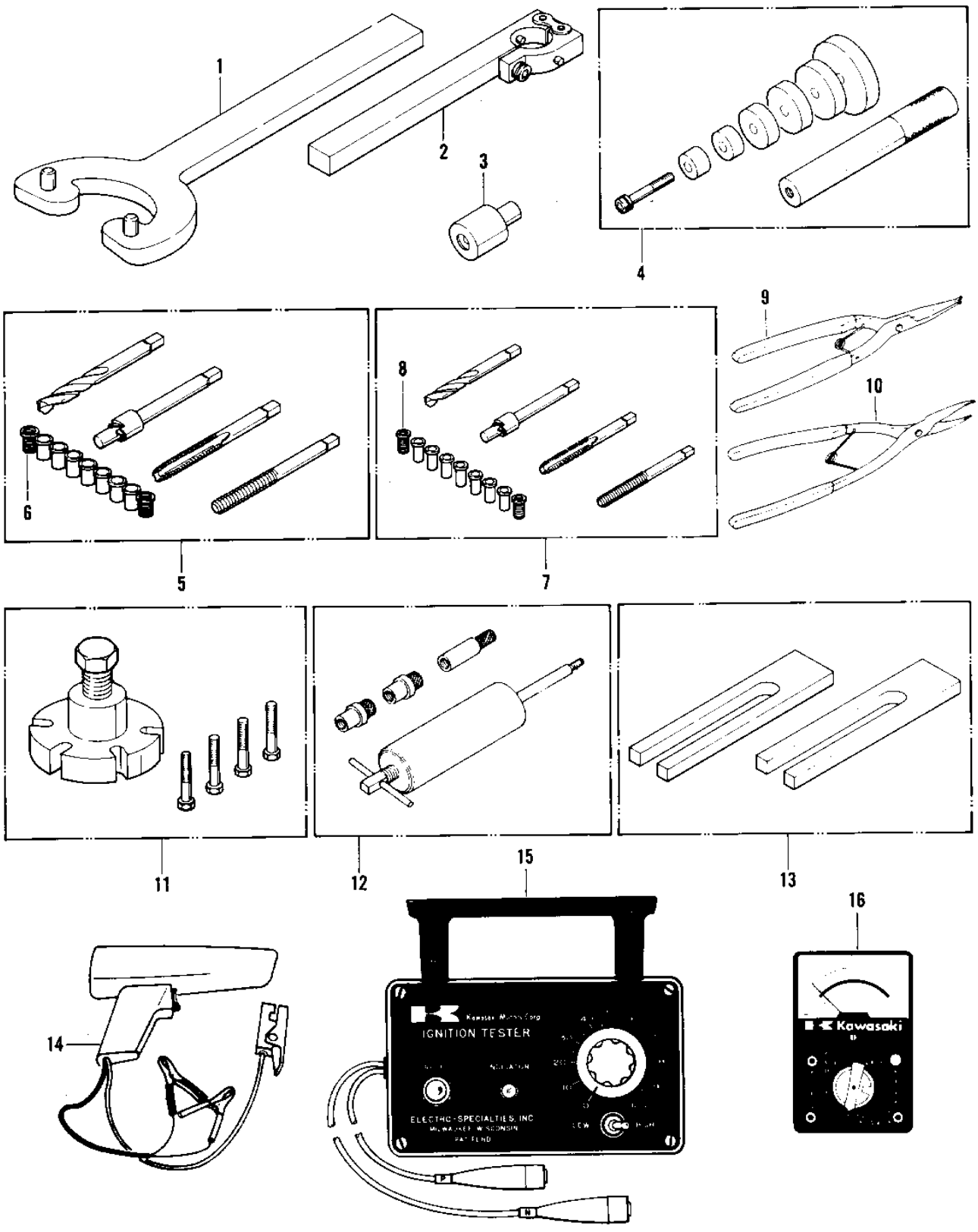

© 2026 Kawasaki Motors Corp., U.S.A.

1978 JS440

PARTS LIST

SPECIAL SERVICE TOOLS ('77-'78 A1/A1A/A2

ITEM NAME	PART NUMBER	QUANTITY
COUPL FWHL SPAN (Canada) (Ref # 1)	W56019-002	1
HOLDER-DRIVE SHAFT (Ref # 2)	W56019-003	1
ADAPTER-COUPLER PLLR (Ref # 3)	W56019-001	1
UNAVAILABLE IN PRICE BOOK (Ref # 4)	W56019-004	1
KIT-THREAD RPR,8MM (Ref # 5)	W56019-008	1
THRD INSERT 8MM (Canada) (Ref # 6)	W56019-009	1
KIT-THREAD RPR,6MM (Ref # 7)	W56019-006	1
THRD INSERT 6MM (Canada) (Ref # 8)	W56019-007	1
PLIERS,CIRCLIP,OUTSID (Ref # 9)	57001-144	1
PLIERS,CIRCLIP,INSIDE (Ref # 10)	57001-143	1
57001-259 (Canada) (Ref # 11)	T57001-259	1
57001-910 (Canada) (Ref # 12)	T57001-910	1
UNAVAILABLE IN PRICE BOOK (Ref # 13)	T57001-170	1
*** N.L.A.*** (Canada) (Ref # 14)	57001-3514	1
*** N.L.A.*** (Canada) (Ref # 15)	T56019-201	1
MULTIMETER (Ref # 16)	57001-983	1

© 2026 Kawasaki Motors Corp., U.S.A.