# 1982 KE175

## PARTS DIAGRAM

## LABELS

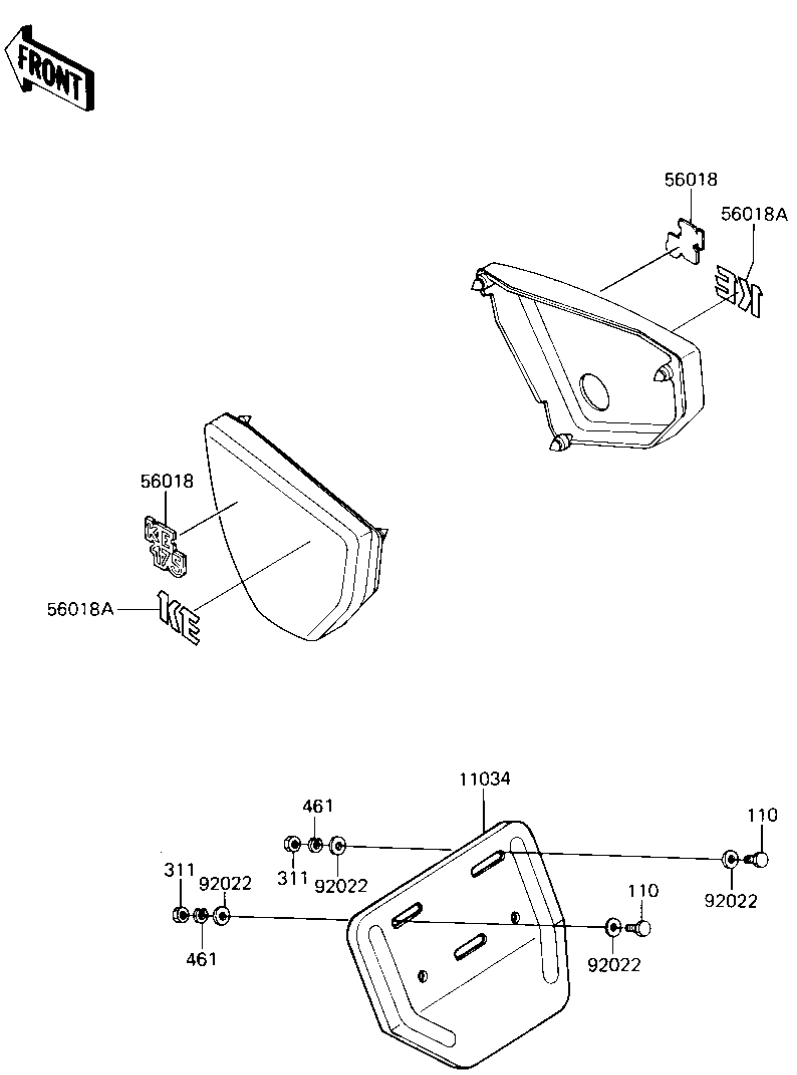


© 2026 Kawasaki Motors Corp., U.S.A.

# 1982 KE175

## PARTS LIST

## LABELS

| ITEM NAME | PART NUMBER | QUANTITY |
|---|---|---|
| BRACKET,LICENSE PLATE (Ref # 11034) | 11034-1117 | 1 |
| MARK,SIDE COVER (Ref # 56018) | 56018-1035 | 2 |
| WASHER 6.5X20X1.6T (Ref # 92022) | 92022-125 | 4 |
| BOLT-UPSET,6X20 (Ref # 110) | 112G0620 | 2 |
| NUT 6MM (Ref # 311) | 311B0600 | 2 |
| WASHER SPRING 6MM (Ref # 461) | 461F0600 | 2 |

© 2026 Kawasaki Motors Corp., U.S.A.