1982 KE175

PARTS DIAGRAM

FOOTRESTS

F2160-0037



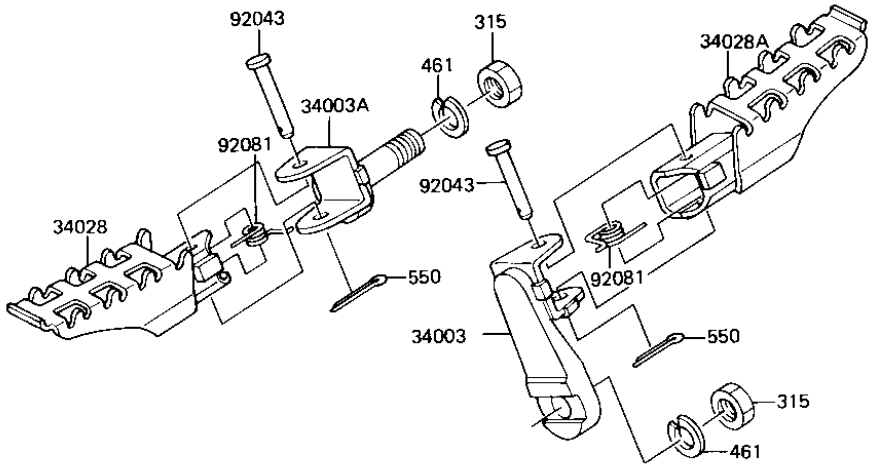

© 2026 Kawasaki Motors Corp., U.S.A.

1982 KE175

PARTS LIST

FOOTRESTS

ITEM NAME	PART NUMBER	QUANTITY
BRACKET,R.H FOOTREST (Ref # 34003)	34003-1024	1
HOLDER-STEP,FR,LH (Ref # 34003A)	34003-1112	1
STEP,L.H FR FOOTREST (Ref # 34028)	34028-1013	1
STEP,R.H FR FOOTREST (Ref # 34028A)	34028-1014	1
PIN-FOOTREST BAR FIT (Ref # 92043)	92043-080	2
SPRING,FR FOOTREST (Ref # 92081)	92081-1133	2
NUT 14MM (Ref # 315)	315B1400	2
WASHER SPRING 14MM (Ref # 461)	461F1400	2
PIN,COTTER,2.5X15 (Ref # 550)	550D2515	2

© 2026 Kawasaki Motors Corp., U.S.A.