1967 Roadrunner

PARTS DIAGRAM

OPTIONAL PARTS

R

—

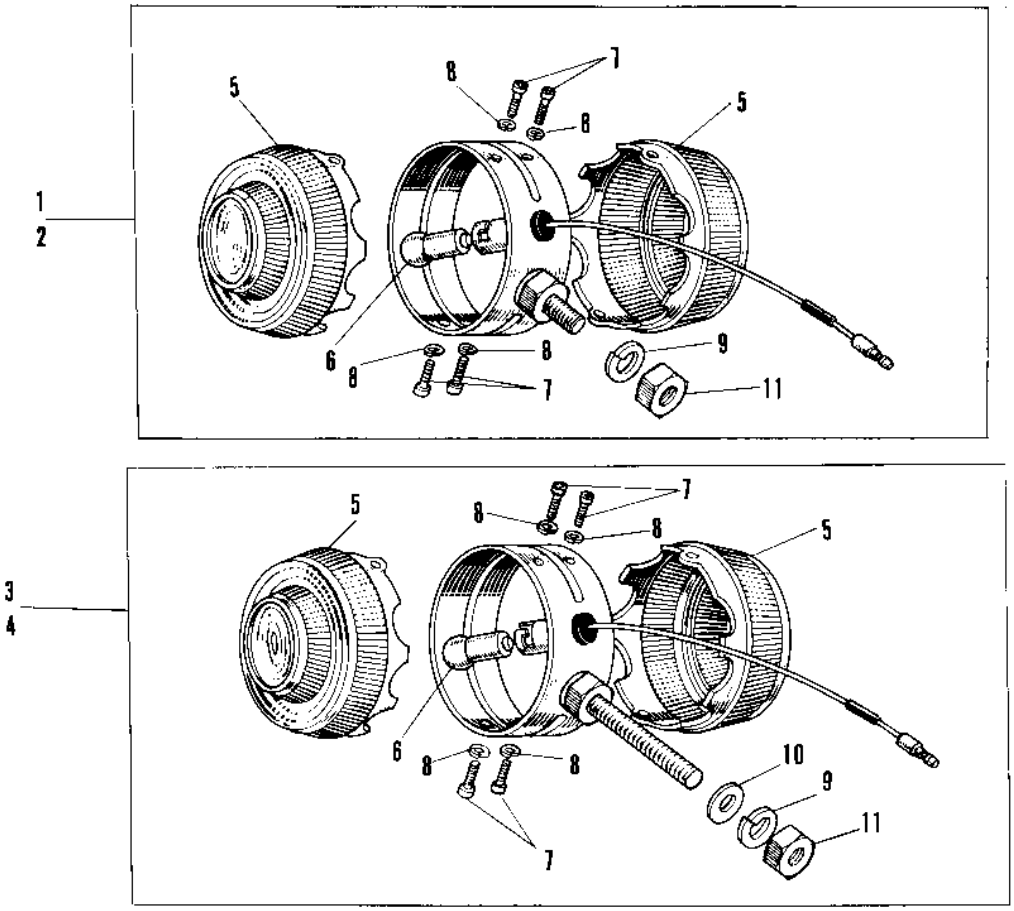

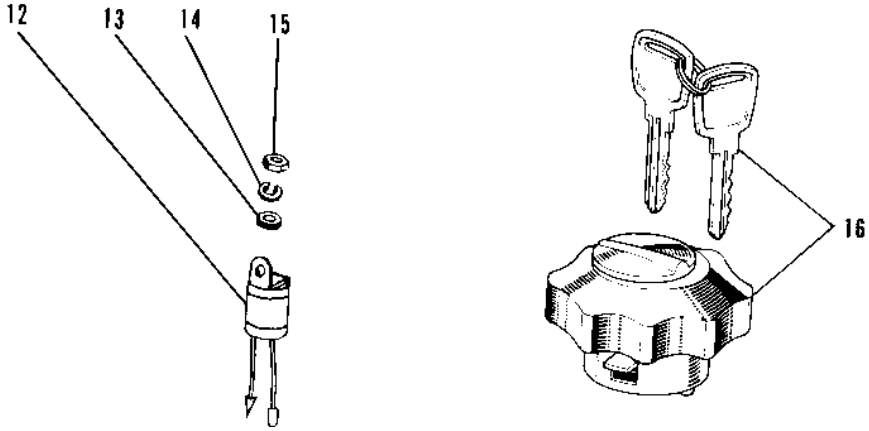

© 2026 Kawasaki Motors Corp., U.S.A.

1967 Roadrunner

PARTS LIST

OPTIONAL PARTS

ITEM NAME	PART NUMBER	QUANTITY
LAMP FRNT TURN SIG RH (Ref # 1)	23040-009	1
LAMP FRNT TURN SIG LH (Ref # 2)	23042-009	1
LAMP REAR TURN SIG RH (Ref # 3)	23043-008	1
LAMP REAR TURN SIG LH (Ref # 4)	23044-007	1
LENS TURN SIGNAL LAMP (Ref # 5)	23048-007	8
BULB 6V 8W (Ref # 6)	92069-038	4
SCREW PAN HEAD 3X6 (Ref # 7)	220E0306	8
SCREW PAN HEAD 3X6 (Ref # 7)	220E0306	8
WASHER SPRING 3MM (Ref # 8)	461F0300	8
WASHER SPRING 8MM (Ref # 9)	461F0800	8
WASHER PLAIN 8MM (Ref # 10)	411B0800	2
NUT,8MM (Ref # 11)	311B0800	8
RELAY TURN SIGNAL (Ref # 12)	27002-005	1
WASHER PLAIN 6MM (Ref # 13)	410B0600	1
WASHER SPRING 6MM (Ref # 14)	461F0600	1
NUT 6MM (Ref # 15)	311B0600	1
CAP,FUEL TANK LOCKING (Ref # 16)	51048-006	1

© 2026 Kawasaki Motors Corp., U.S.A.