1968 Roadrunner

PARTS DIAGRAM

CHASSIS ELECTRICAL EQUIPMENT

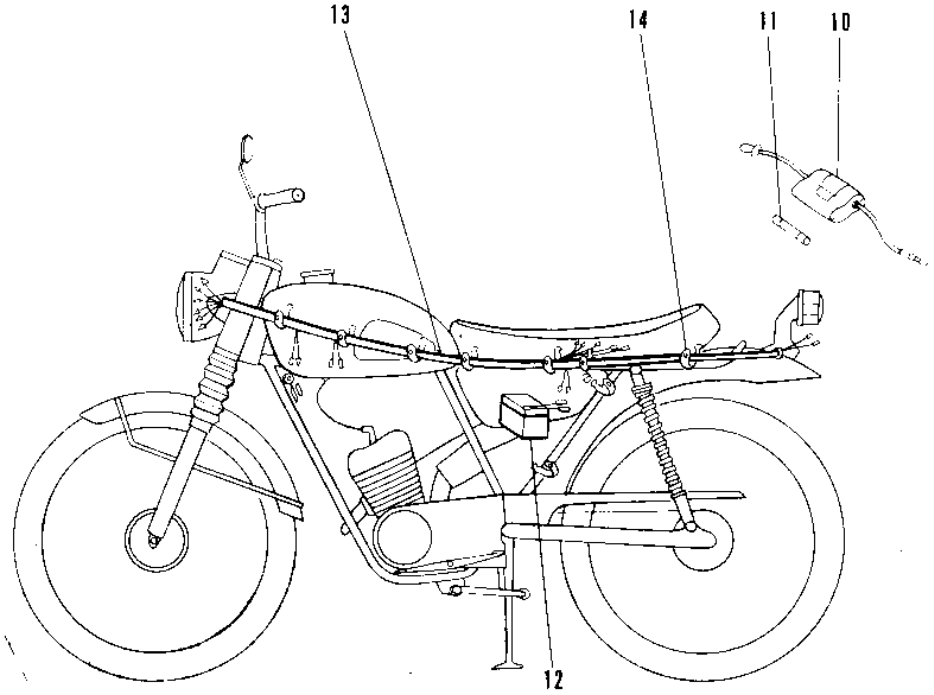

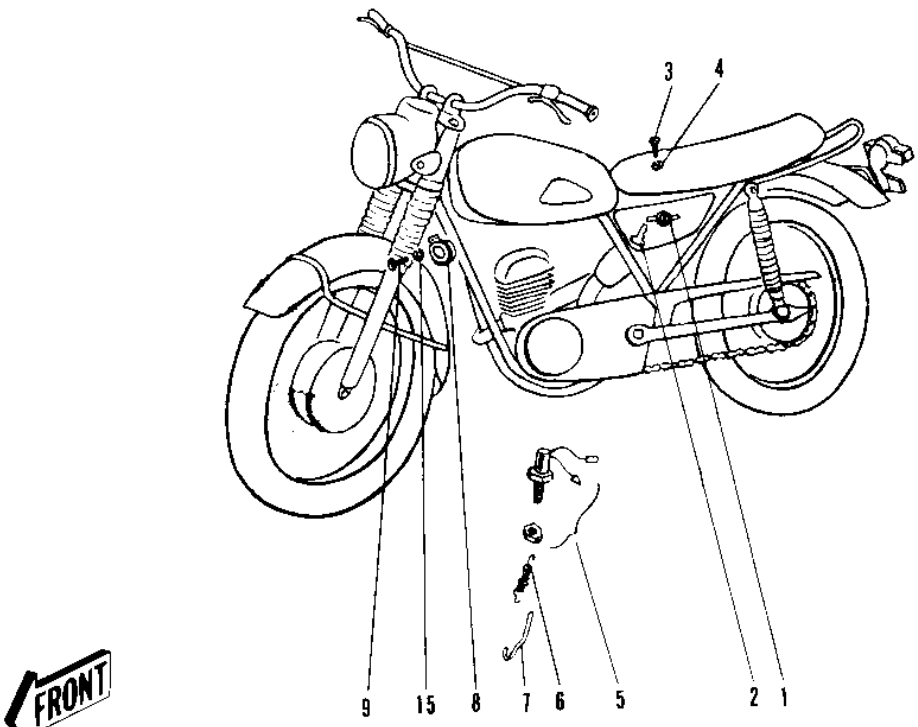

© 2026 Kawasaki Motors Corp., U.S.A.

1968 Roadrunner

PARTS LIST

CHASSIS ELECTRICAL EQUIPMENT

ITEM NAME	PART NUMBER	QUANTITY
SWITCH ASSY IGNITION (Ref # 1)	27005-011	1
KEY SET IGN NO.271 (Ref # 2)	27008-013-71	1
KEY SET IGN NO.272 (Ref # 2)	27008-013-72	1
KEY SET IGN NO.273 (Ref # 2)	27008-013-73	1
KEY SET IGN NO.274 (Ref # 2)	27008-013-74	1
SCREW PAN HEAD 6X12 (Ref # 3)	220B0612	2
WASHER SPRING 6MM (Ref # 4)	461F0600	5
SWITCH-BRAKE LAMP (Ref # 5)	27010-018	1
SPRING BRAKE LAMP SW (Ref # 6)	27011-006	1
HOOK BRK LAMP SW SPRG (Ref # 7)	27012-004	1
HORN (Ref # 8)	27003-005	1
BOLT-UPSET,6X12 (Ref # 9)	112G0612	2
FUSE ASSY (Ref # 10,11)	26004-026	1
FUSE 10A (Ref # 11)	26006-001	2
YUA BAT 6N4-2A-3 (Ref # 12)	K26012-006	1
WIRING HARNESS MAIN (Ref # 13)	26001-045	1
BAND RUBBER (Ref # 14)	92072-013	10
WASHER SPRING 8MM (Ref # 15)	461F0800	2

© 2026 Kawasaki Motors Corp., U.S.A.