1967 Roadrunner

PARTS DIAGRAM

SIDE COVERS/CHAIN COVER/CHAIN

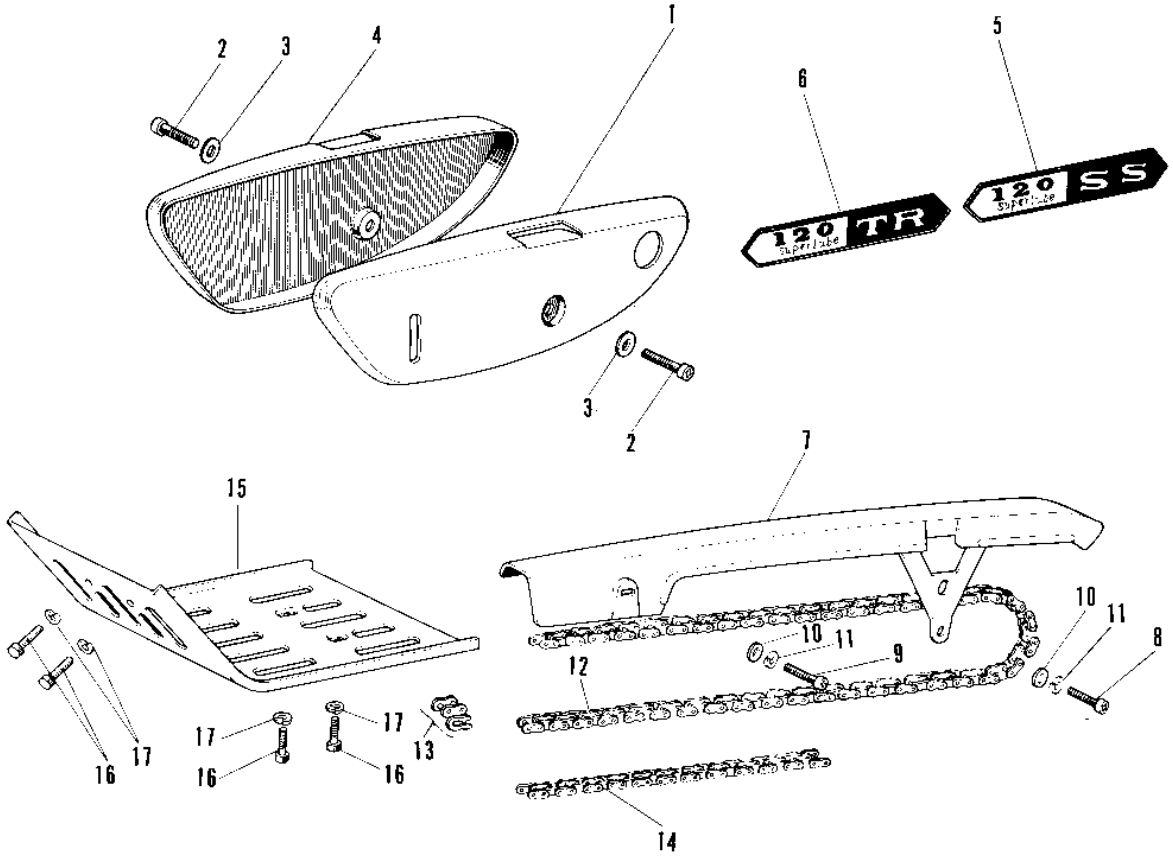

© 2026 Kawasaki Motors Corp., U.S.A.

1967 Roadrunner

PARTS LIST

SIDE COVERS/CHAIN COVER/CHAIN

ITEM NAME	PART NUMBER	QUANTITY
COVER-L.H SIDE,SILVER (Ref # 1)	36001-012-14	1
COVER L.H SIDE C.RED (Ref # 1)	36001-012-24	1
COVER L.H SIDE C.BLUE (Ref # 1)	36001-012-27	1
SCREW PAN HEAD 6X12 (Ref # 2)	220E0612	2
WASHER PLAIN 6MM (Ref # 3)	410B0600	2
COVER,RH SIDE,C.BLUE (Ref # 4)	36007-013-27	1
COVER,RH SIDE,C.BLUE (Ref # 4)	36007-013-27	1
COVER,RH SIDE,C.BLUE (Ref # 4)	36007-013-27	1
EMBLEM SIDE COVER (Ref # 5)	56018-003	2
COVER CHAIN (Ref # 7)	36014-012	1
SCREW PAN HEAD 5X10 (Ref # 8)	220B0510	1
SCREW PAN HEAD 5X10 (Ref # 8)	220B0510	1
SCREW PAN HEAD 5X8 (Ref # 9)	220B0508	1
SCREW PAN HEAD 5X8 (Ref # 9)	220B0508	1
WASHER PLAIN 5MM (Ref # 10)	410B0500	2
WASHER SPRING 5MM (Ref # 11)	461F0500	2
DR CHAIN 428X102 (Ref # 12, 13)	92057-035	1
DR CHAIN 428X106 (Ref # 12, 13)	92057-036	1
JOINT-CHAIN (Ref # 13)	92058-1014	1
GUARD ENGINE (Ref # 15)	55011-003	1
BOLT-SMALL-UPSET,8X14 (Ref # 16)	115B0814	4
WASHER SPRING 8MM (Ref # 17)	461F0800	4

© 2026 Kawasaki Motors Corp., U.S.A.