1969 Roadrunner

PARTS DIAGRAM

REAR HUB/BRAKE

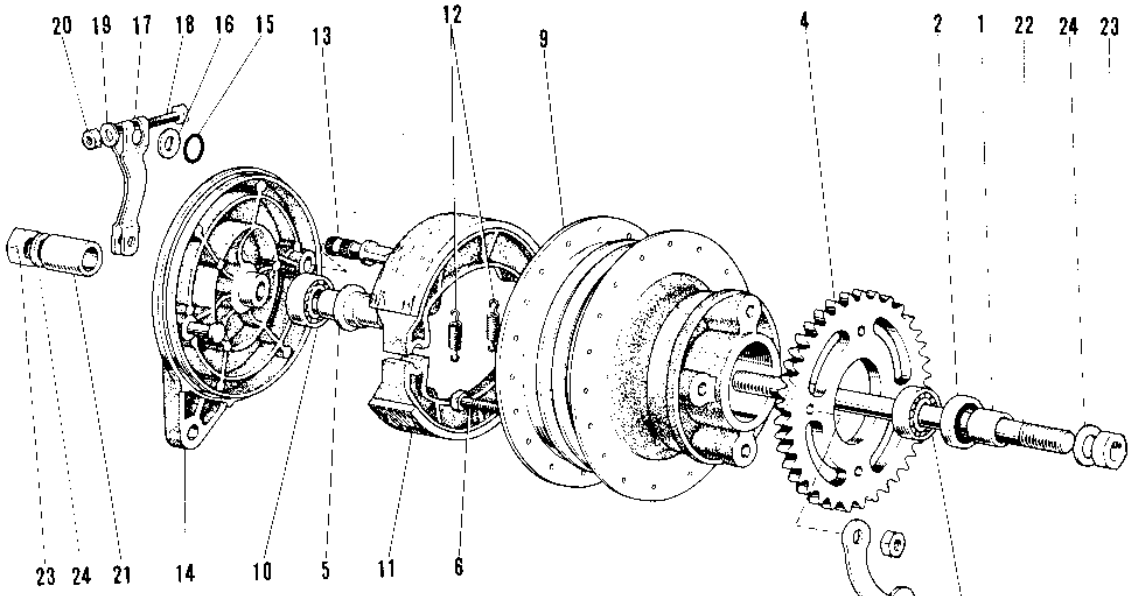

C2TR Only

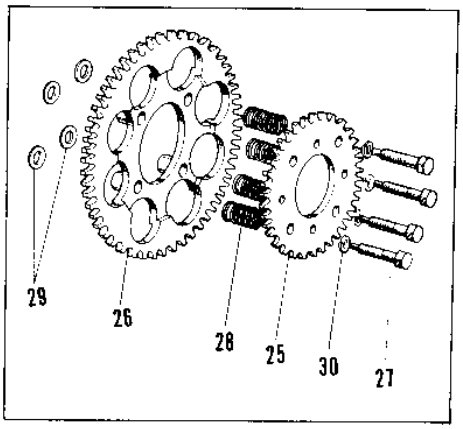

FRONT

© 2026 Kawasaki Motors Corp., U.S.A.

1969 Roadrunner

PARTS LIST

REAR HUB/BRAKE

ITEM NAME	PART NUMBER	QUANTITY
COLLAR REAR HUB L.H (Ref # 1)	42032-005	1
OIL SEAL RR BRK DRUM (Ref # 2)	92052-001	1
BEARING BALL #6301 (Ref # 3)	601B6301	1
REAR SPROCKET 34T (Ref # 4)	42041-019	1
SPACER RR HUB BEARING (Ref # 5)	42010-003	1
BOLT REAR SPROCKET (Ref # 6)	92001-021	4
WASHER RR SPRCKT LOCK (Ref # 7)	92088-003	2
NUT,8MM (Ref # 8)	311B0800	4
DRUM ASSY REAR BRAKE (Ref # 2,3,5,)	42005-006	1
PANEL ASSY-REAR BRAKE (Ref # 11~20)	42006-014	1
BEARING BALL #6301Z (Ref # 10)	601B6301Z	1
SHOE-BRAKE (Ref # 11)	41048-1085	2
SPRING,BRAKE SHOE (Ref # 12)	92081-1766	2
CAM SHAFT-FRONT BRAKE (Ref # 13)	41050-018	1
"0" RING,11MM (Ref # 15)	92055-004	1
WASHER BRAKE CAM SHT (Ref # 16)	41052-001	1
LEVER,FRONT BRAKE CAM (Ref # 17)	41053-002	1
BOLT-UPSET (Ref # 18)	112G0630	1
WASHER PLAIN 6MM (Ref # 19)	410B0600	1
NUT 6MM (Ref # 20)	311B0600	1
COLLAR REAR HUB R.H (Ref # 21)	42032-006	1
AXLE REAR (Ref # 22)	42031-009	1
AXLE REAR (Ref # 22)	42031-019	1
NUT,12MM (Ref # 23)	314G1200A	2
NUT-HEX-FINE (Ref # 23)	314B1200	2
WASHER PLAIN 12MM (Ref # 24)	410B1200	2

© 2026 Kawasaki Motors Corp., U.S.A.