1971 H1-B

PARTS DIAGRAM

WHEELS/TIRES ('73-'75 D/E/F & '76 A8)

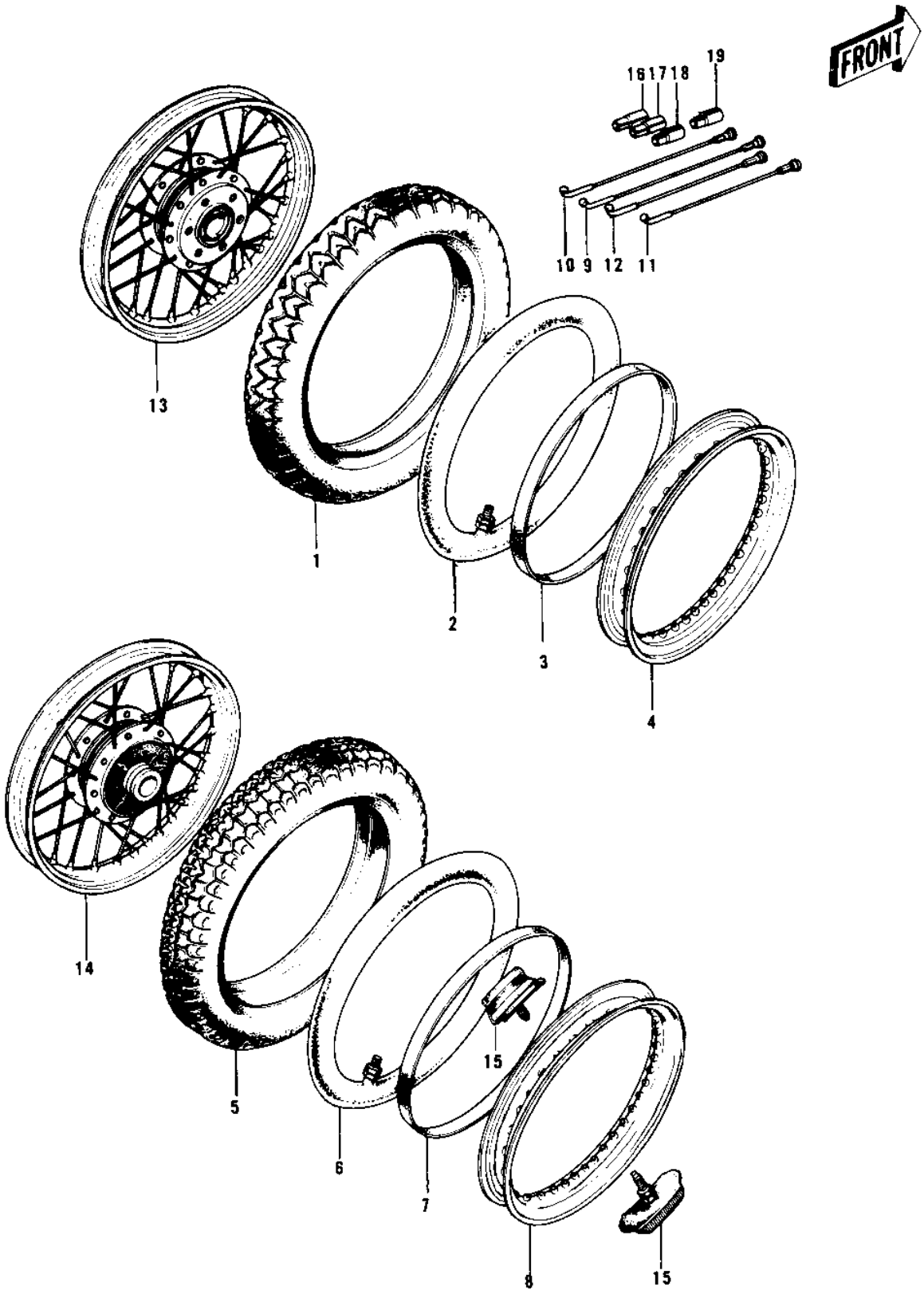

© 2026 Kawasaki Motors Corp., U.S.A.

1971 H1-B

PARTS LIST

WHEELS/TIRES ('73-'75 D/E/F & '76 A8)

ITEM NAME	PART NUMBER	QUANTITY
UNAVAILABLE IN PRICE BOOK (Ref # 1)	41021-029	1
TIRE 325H-19 F6B F (Ref # 1)	41021-038	1
*** N.L.A.*** (Canada) (Ref # 2)	41022-030	1
TUBE,3.0/3.25/3.60-19 (Ref # 2)	41022-1019	1
BAND RIM (Ref # 3)	41023-015	1
RIM,1.8BX19W (Ref # 4)	41025-051	1
RIM (Ref # 4)	41025-085	1
UNAVAILABLE IN PRICE BOOK (Ref # 5)	41021-021	1
UNAVAILABLE IN PRICE BOOK (Ref # 5)	41021-030	1
TIRE 400H-18 K87 R (Ref # 5)	41021-039	1
TUBE 350/375/410-18 (Ref # 6)	41022-031	1
BAND,RIM,4.00/5.10-18 (Ref # 7)	41023-1006	1
RIM-2-15BX18W (Ref # 8)	41025-058	1
SPOKE-ASY,FR INNER (Ref # 9)	41027-042	20
SPOKE-ASY,FR INNER (Ref # 9)	41027-085	20
SPOKE-ASY,FR OUTER (Ref # 10)	41028-041	20
SPOKE-ASY,FR OUTER (Ref # 10)	41028-084	20
SPOKE-ASY,RR INNER (Ref # 11)	41027-047	20
SPOKE-ASY,RR OUTER (Ref # 12)	41028-046	20
WHEEL ASSY-FRONT (Ref # 13)	41074-022	1
WHEEL ASSY FRONT (Ref # 13)	41074-047	1
WHEEL ASSY,REAR (Ref # 14)	42048-021	1
PROTECTOR-BEAD,2.15B (Ref # 15)	41024-008	1
WEIGHT,BALANCE,10G (Ref # 16)	41075-1007	AR
WEIGHT,BALANCE,20G (Ref # 17)	41075-1008	AR
WEIGHT,BALANCE,30G (Ref # 18)	41075-1009	AR
WEIGHT,BALANCE,5G (Ref # 19)	41075-1010	AR

© 2026 Kawasaki Motors Corp., U.S.A.