1969 Mach III

PARTS DIAGRAM

AIR CLEANER (H1-D/E/F)

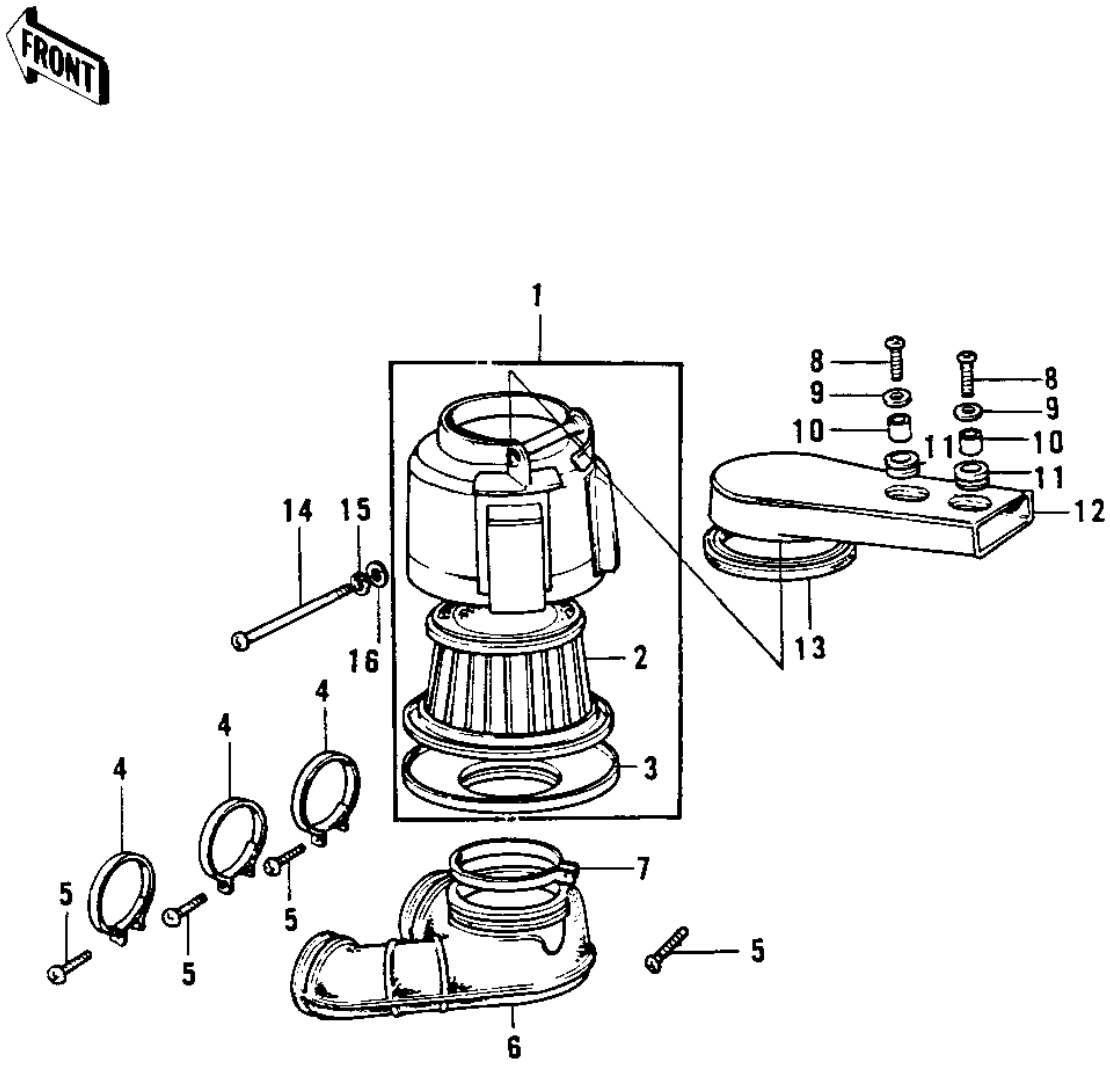

(H1-D/E

© 2026 Kawasaki Motors Corp., U.S.A.

1969 Mach III

PARTS LIST

AIR CLEANER (H1-D/E/F)

ITEM NAME	PART NUMBER	QUANTITY
AIR CLEANER ASY,BLACK (Ref # 1)	11010-065-10	1
AIR CLEANER ASY,BLACK (Ref # 1)	11010-091-21	1
ELEMENT,AIR CLNR (Ref # 2)	11013-019	1
CAP AIR CLEANER (Ref # 3)	11012-011	1
CLAMP (Ref # 4)	92037-1326	3
SCREW PAN HEAD 6X35 (Ref # 5)	220B0635	4
SCREW-PAN-CROS,6X35,B (Ref # 5)	220C0635	4
PIPE ASSY-INLET (Ref # 6)	11015-033	1
CLAMP,AIR CLEANER (Ref # 7)	92037-128	1
SCREW PAN HEAD 6X45 (Ref # 8)	220B0645	2
WASHER 6.5X20X1.6T (Ref # 9)	92022-125	2
COLLAR-SILENCER (Ref # 10)	92027-149	2
DAMPER RUBBER (Ref # 11)	92075-118	2
SILENCER (Ref # 12)	11016-006	1
GASKET,SILENCER (Ref # 13)	11017-009	1
SCREW PAN HEAD 6X110 (Ref # 14)	220B06110	1
WASHER SPRING 6MM (Ref # 15)	461F0600	1
WASHER PLAIN 6MM (Ref # 16)	411B0600	1

© 2026 Kawasaki Motors Corp., U.S.A.