1971 H1-B

PARTS DIAGRAM

FRONT HUB (H1-B)

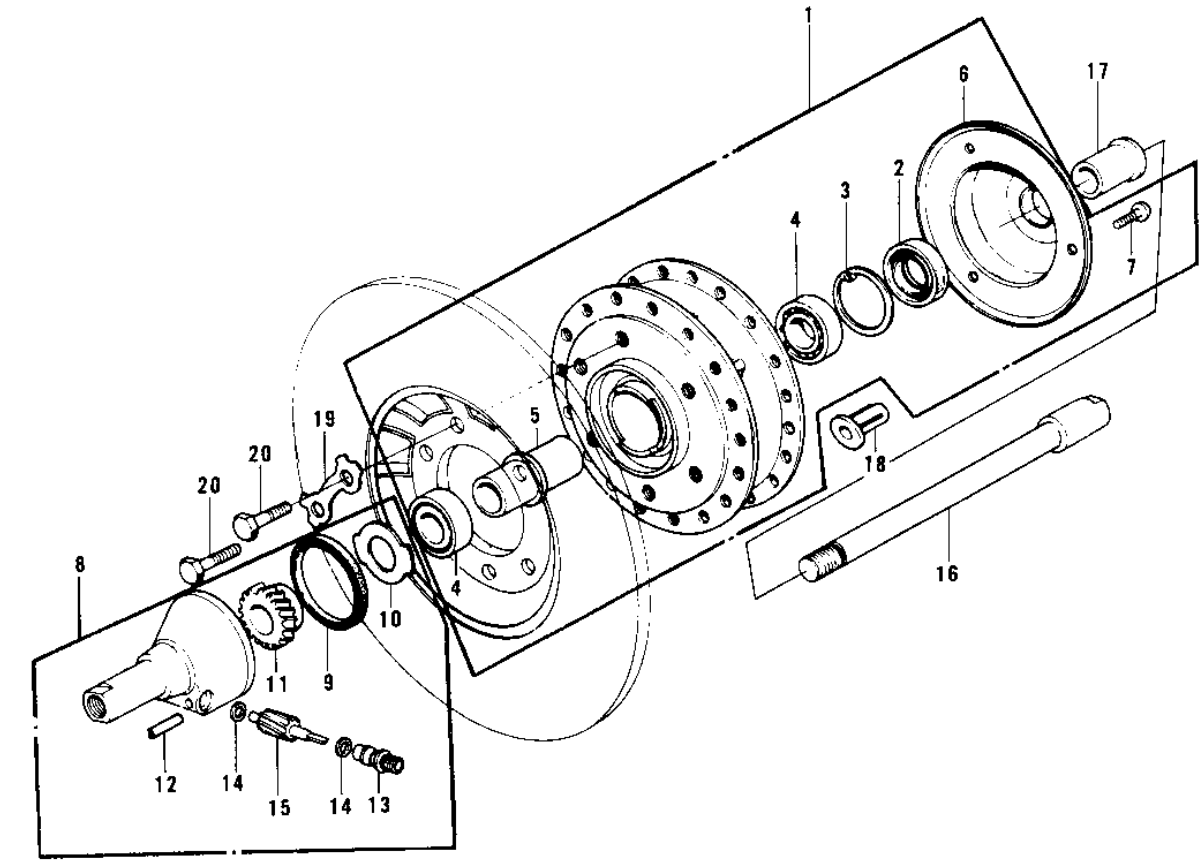

(H1-

© 2026 Kawasaki Motors Corp., U.S.A.

1971 H1-B

PARTS LIST

FRONT HUB (H1-B)

ITEM NAME	PART NUMBER	QUANTITY
DRUM-ASSY,FR BRK,BLK (Ref # 1)	41034-021-21	1
OIL SEAL-COUPLING (Ref # 2)	92052-003	1
RING, SNAP,43.5M/M (Ref # 3)	92033-1040	1
BEARING BALL #6203 (Ref # 4)	601B6203	2
COLLAR-FRONT DRUM (Ref # 5)	41039-019	1
COVER-BRAKE DRUM DUST (Ref # 6)	41042-009	1
SCREW OVL CNTSNK 5X12 (Ref # 7)	222E0512A	3
CASE ASSY-SPEED GEAR (Ref # 8)	41078-001	1
OIL SEAL,VC54656 (Ref # 9)	92050-046	1
RECEIVER-SPEEDO GEAR (Ref # 10)	41064-007	1
GEAR-SPEEDOMETER (Ref # 11)	41059-016	1
PIN,SPRING (Ref # 12)	41082-001	1
BUSH SPEEDMETER CABLE (Ref # 13)	41062-001	1
WASHER THRST SPD PINI (Ref # 14)	41063-001	2
PINION-SPEEDOMETER (Ref # 15)	41060-012	1
AXLE-FRONT HUB (Ref # 16)	41068-036	1
COLLAR-FRONT AXLE (Ref # 17)	41069-018	1
CAP-FRONT DRUM HOLE (Ref # 18)	92102-006	6
WASHER-LOCK,8MM (Ref # 19)	92088-014	3
BOLT-HEX HEAD,8X28 (Ref # 20)	92001-104	6

© 2026 Kawasaki Motors Corp., U.S.A.