1969 Mach III

PARTS DIAGRAM

FRONT BRAKE (H1-B)

Kawasaki
Let the Good Times Roll®

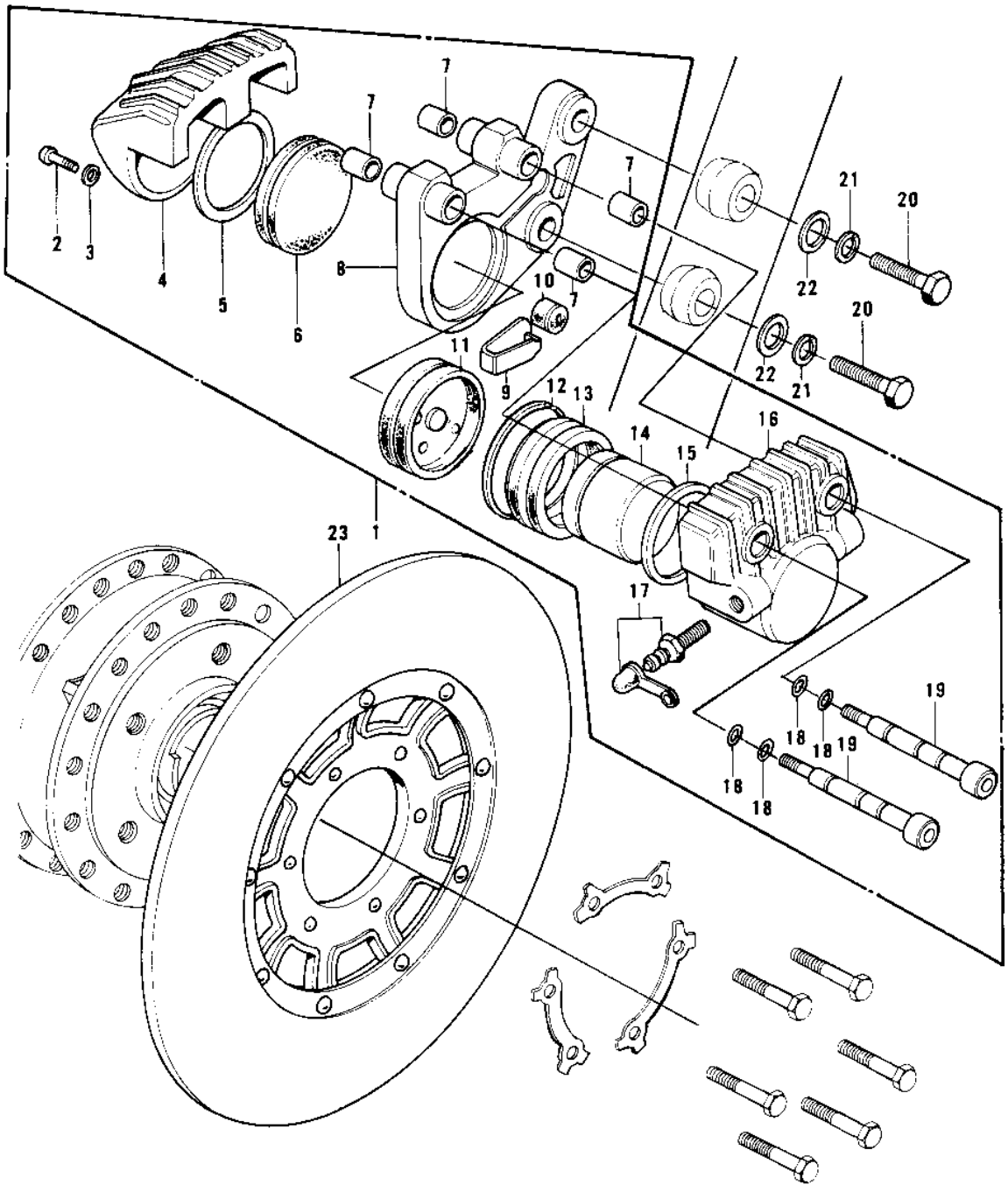

(H1-

© 2026 Kawasaki Motors Corp., U.S.A.

1969 Mach III

PARTS LIST

FRONT BRAKE (H1-B)

Kawasaki
Let the Good Times Roll®

ITEM NAME	PART NUMBER	QUANTITY
CALIPER ASSY (Ref # 1)	43041-001	1
SCREW PAN HEAD 6X12 (Ref # 2)	220B0612	1
WASHER SPRING 6MM (Ref # 3)	461F0600	1
CALIPER B (Ref # 4)	43043-001	1
RING-PAD B (Ref # 5)	43071-001	1
PAD B (Ref # 6)	43051-001	1
DUST SEAL-SHAFT (Ref # 7)	43052-001	4
HOLDER-CALIPER (Ref # 8)	43044-001	1
STOPPER-PAD A (Ref # 9)	43046-001	1
BUSHING-RUBBER (Ref # 10)	43047-001	1
PAD A (Ref # 11)	43082-001	1
BAND-DUST SEAL (Ref # 12)	43058-001	1
DUST SEAL-PISTON (Ref # 13)	43054-001	1
PISTON-CALIPER (Ref # 14)	43048-001	1
RING-PISTON (Ref # 15)	43049-001	1
CALIPER A (Ref # 16)	43042-001	1
BLEEDER SET (Ref # 17)	43085-001	1
"0" RING,SHAFT (Ref # 18)	43053-001	4
SHAFT (Ref # 19)	43045-001	2
BOLT-HEX HEAD,10X43 (Ref # 20)	43070-001	2
WASHER SPRING 10MM (Ref # 21)	461F1000	2
WASHER PLAIN 10MM (Ref # 22)	411B1000	2
DISC PLATE-FRONT BRK (Ref # 23)	41080-001	1
REPAIR SET-CALIPER (Ref # 7.12.1)	43073-002	1

© 2026 Kawasaki Motors Corp., U.S.A.