# 1979 KZ1300-A1

## PARTS DIAGRAM

OIL PAN/OIL FILTER (~E/NO. 010637)

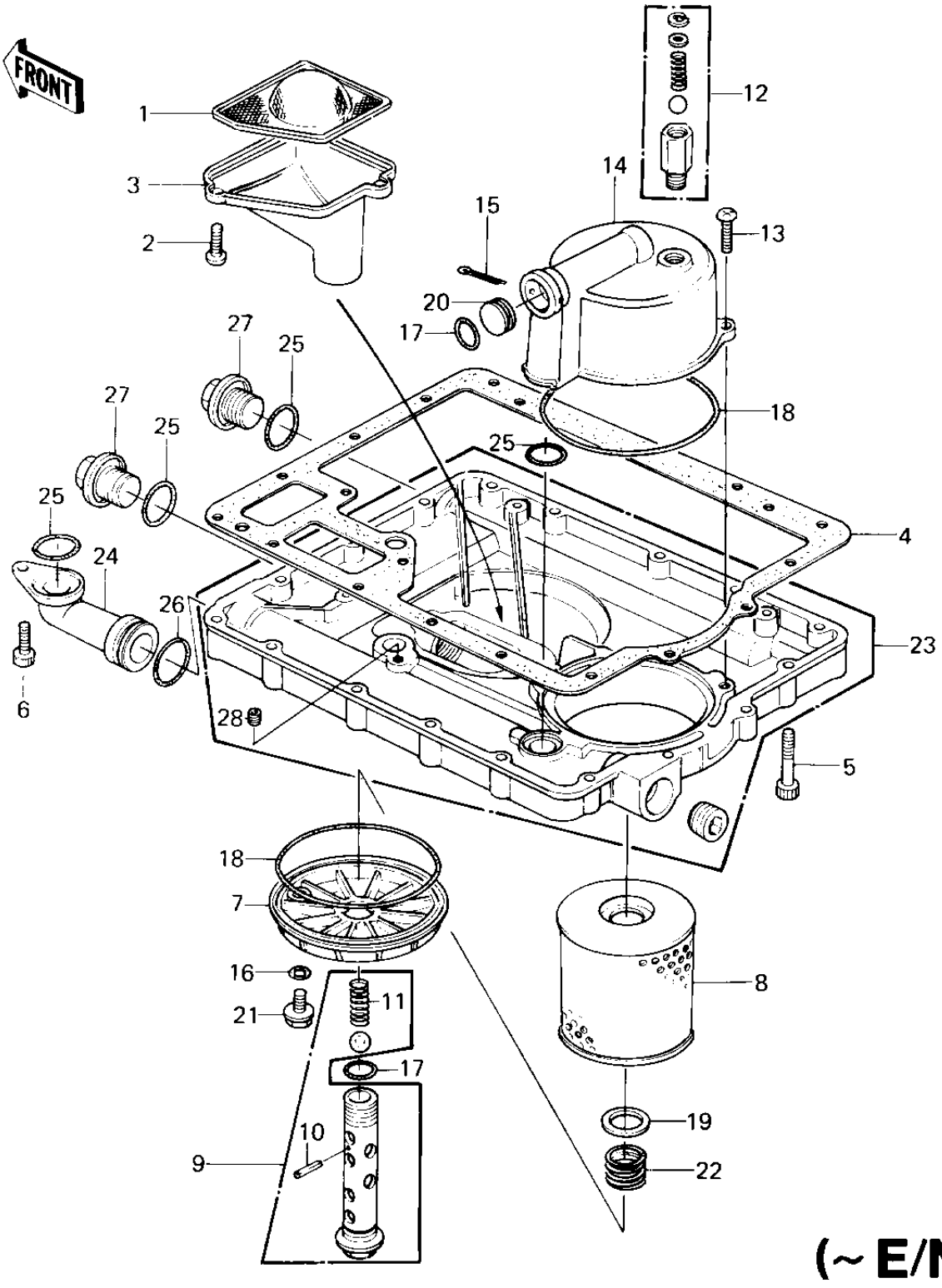


© 2026 Kawasaki Motors Corp., U.S.A.

# 1979 KZ1300-A1

## PARTS LIST

### OIL PAN/OIL FILTER (~E/NO. 010637)

| ITEM NAME | PART NUMBER | QUANTITY |
|---|---|---|
| FILTER,OIL (Ref # 1) | 14043-1007 | 1 |
| SCREW PAN HEAD 6X20 (Ref # 2) | 220B0620 | 3 |
| CASE,OIL FILTER (Ref # 3) | 32099-1006 | 1 |
| GASKET,OIL PAN (Ref # 4) | 11009-1093 | 1 |
| BOLT,SOCKET,6X35 (Ref # 5) | 120P0635 | 17 |
| BOLT,6X20 (Ref # 6) | 120P0620 | 1 |
| COVER,OIL FILTER (Ref # 7) | 14025-1170 | 1 |
| COVER,OIL FILTER (Ref # 7) | 14025-1170 | 1 |
| ELEMENT,OIL FILTER (Ref # 8) | 16099-002 | 1 |
| BOLT ASSY,OIL FILTER (Ref # 9) | 16126-1006 | 1 |
| SPRING PIN (Ref # 10) | 92043-111 | 1 |
| SPRING,PISTON (Ref # 11) | 92081-133 | 1 |
| RELIEF VALVE ASSY (Ref # 12) | 16130-1001 | 1 |
| SCREW PAN HEAD 6X20 (Ref # 13) | 220B0620 | 2 |
| CASE,OIL FILTER (Ref # 14) | 32099-1008 | 1 |
| PIN,COTTER,2.0X40 (Ref # 15) | 550D2040 | 1 |
| "O" RING,8MM (Ref # 16) | 670B1508 | 1 |
| "0" RING,16MM (Ref # 17) | 670B2016 | 2 |
| "0" RING,95MM (Ref # 18) | 671B2595 | 2 |
| WASHER,20.5X30X1.0 (Ref # 19) | 92022-1012 | 1 |
| PLUG,DRAIN,8X10 (Ref # 21) | 92066-1026 | 1 |
| SPRING,OIL FILTER (Ref # 22) | 92081-1018 | 1 |
| PAN-OIL (Ref # 23) | 49034-5008 | 1 |
| PAN-OIL (Ref # 23) | 49034-5008 | 1 |
| ELBOW,OIL PASSAGE (Ref # 24) | 52014-1002 | 1 |
| "O" RING,22MM (Ref # 25) | 670B2022 | 4 |
| "0" RING,25MM (Ref # 26) | 671B2525 | 1 |
| PLUG,OIL DRAIN (Ref # 27) | 92001-1183 | 2 |
| NOZZLE (Ref # 28) | 92062-015 | 1 |

© 2026 Kawasaki Motors Corp., U.S.A.