1980 Shaft

PARTS DIAGRAM

KICKSTARTER MECHANISM

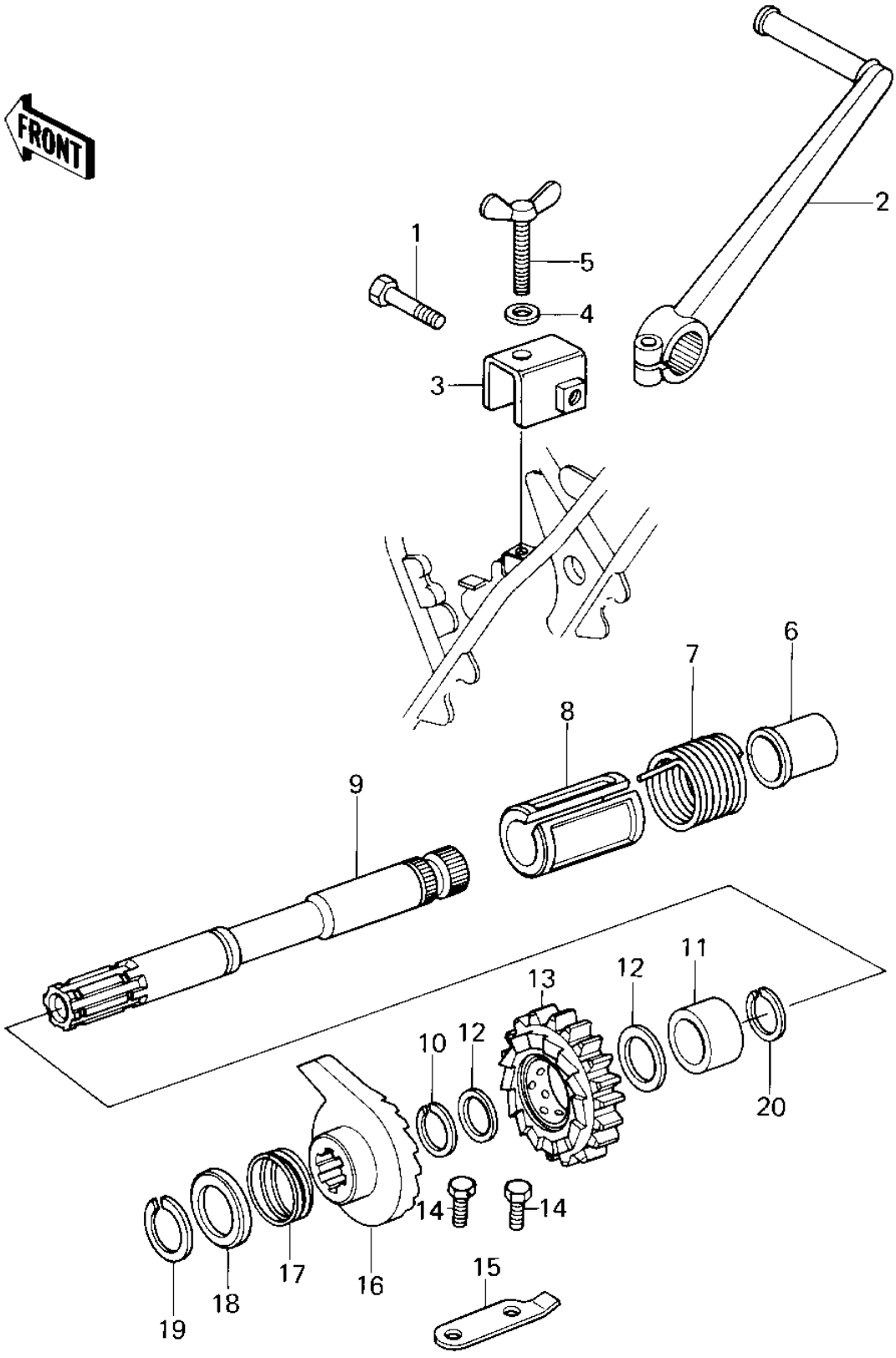

© 2026 Kawasaki Motors Corp., U.S.A.

1980 Shaft

PARTS LIST

KICKSTARTER MECHANISM

ITEM NAME	PART NUMBER	QUANTITY
BOLT,HEX HEAD,10X25 (Ref # 1)	113G1025	4
LEVER ASSY,KICK (Ref # 2)	13059-1006	4
HOLDER,KICK LEVER (Ref # 3)	13091-1044	4
WASHER PLAIN 6MM (Ref # 4)	411B0600	4
BOLT,KICK LEVER HOLDR (Ref # 5)	92001-1170	4
PLUG (Ref # 6)	92074-037	4
SPRING,KICKSTARTER (Ref # 7)	92082-004	4
GUID,KICK SPRING (Ref # 8)	13070-1008	4
SHAFT,KICKSTARTER (Ref # 9)	13066-1004	4
CIRCLIP,25MM (Ref # 10)	92033-025	4
COLLAR,KICKSHAFT (Ref # 11)	92028-126	4
WASHER,PLAIN,22MM (Ref # 12)	92022-207	4
GEAR,KICKSTARTER (Ref # 13)	59051-1006	4
BOLT-UPSET (Ref # 14)	112G0614	4
STOPPER,KICKSTARTER (Ref # 15)	13072-012	4
RATCHET,KICK SHAFT (Ref # 16)	13078-011	4
SPRING RATCHET (Ref # 17)	92081-104	4
CAP,KICKSTARTER (Ref # 18)	92102-008	4
CIRCLIP,19MM (Ref # 19)	480J1900	4
CIRCLIP,22MM (Ref # 20)	480J2200	4

© 2026 Kawasaki Motors Corp., U.S.A.