1979 KZ1000

PARTS DIAGRAM

FRONT BRAKE ('79-'80 A3/A3A/A4)

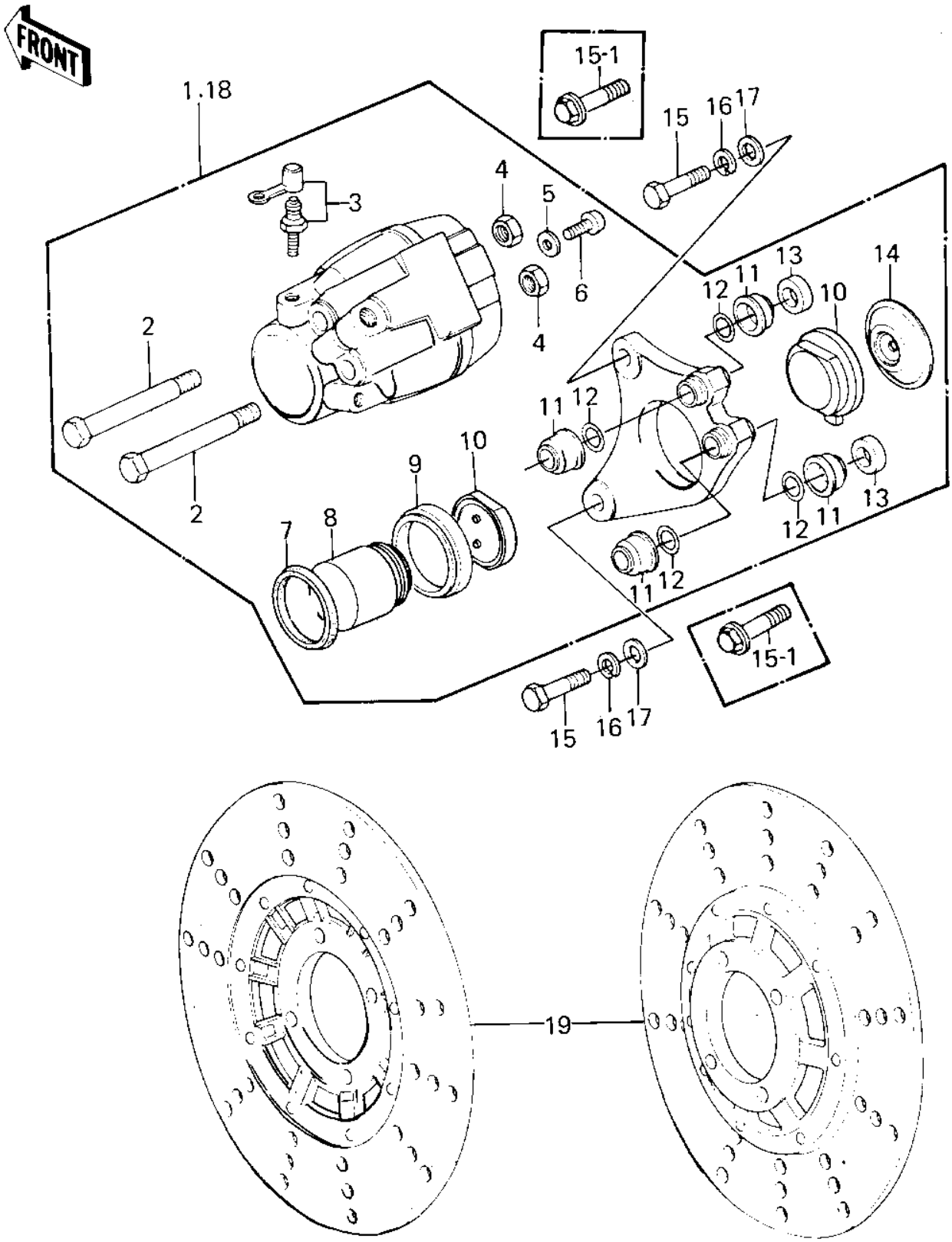

© 2026 Kawasaki Motors Corp., U.S.A.

1979 KZ1000

PARTS LIST

FRONT BRAKE ('79-'80 A3/A3A/A4)

ITEM NAME	PART NUMBER	QUANTITY
CALIPER ASSY,L.H, (Ref # 1)	43041-1024	1
BOLT (Ref # 2)	43045-006	4
BLEEDER SET (Ref # 3)	43085-001	2
NUT 10MM (Ref # 4)	315B1000	4
WASHER SPRING 6MM (Ref # 5)	461F0600	2
SCREW PAN HEAD 6X12 (Ref # 6)	220B0612	2
RING,PISTON SEAL (Ref # 7)	43049-002	2
PISTON,BRAKE,42M/M (Ref # 8)	43020-1012	2
DUST SEALD,RUBBER (Ref # 9)	43054-003	2
PAD SET (Ref # 10)	43082-1001	2
DUST SHILD,SHAFT (Ref # 11)	43052-005	8
"0" RING (Ref # 12)	43053-006	8
PLUG (Ref # 13)	43088-002	4
SPACER (Ref # 14)	43040-004	2
BOLT (Ref # 15)	92007-032	4
BOLT,HEX HEAD,10X38 (Ref # 15-1)	92001-1293	4
WASHER SPRING 10MM (Ref # 16)	461F1000	4
WASHER PLAIN 10MM (Ref # 17)	410B1000	4
CALIPER ASSY,R.H (Ref # 18)	43041-1025	1
DISC PLATE,FRONT BRA (Ref # 19)	41080-1022	2

© 2026 Kawasaki Motors Corp., U.S.A.