1976 KZ900-A4

PARTS DIAGRAM

CHASSIS ELECTRICAL EQUIPMENT

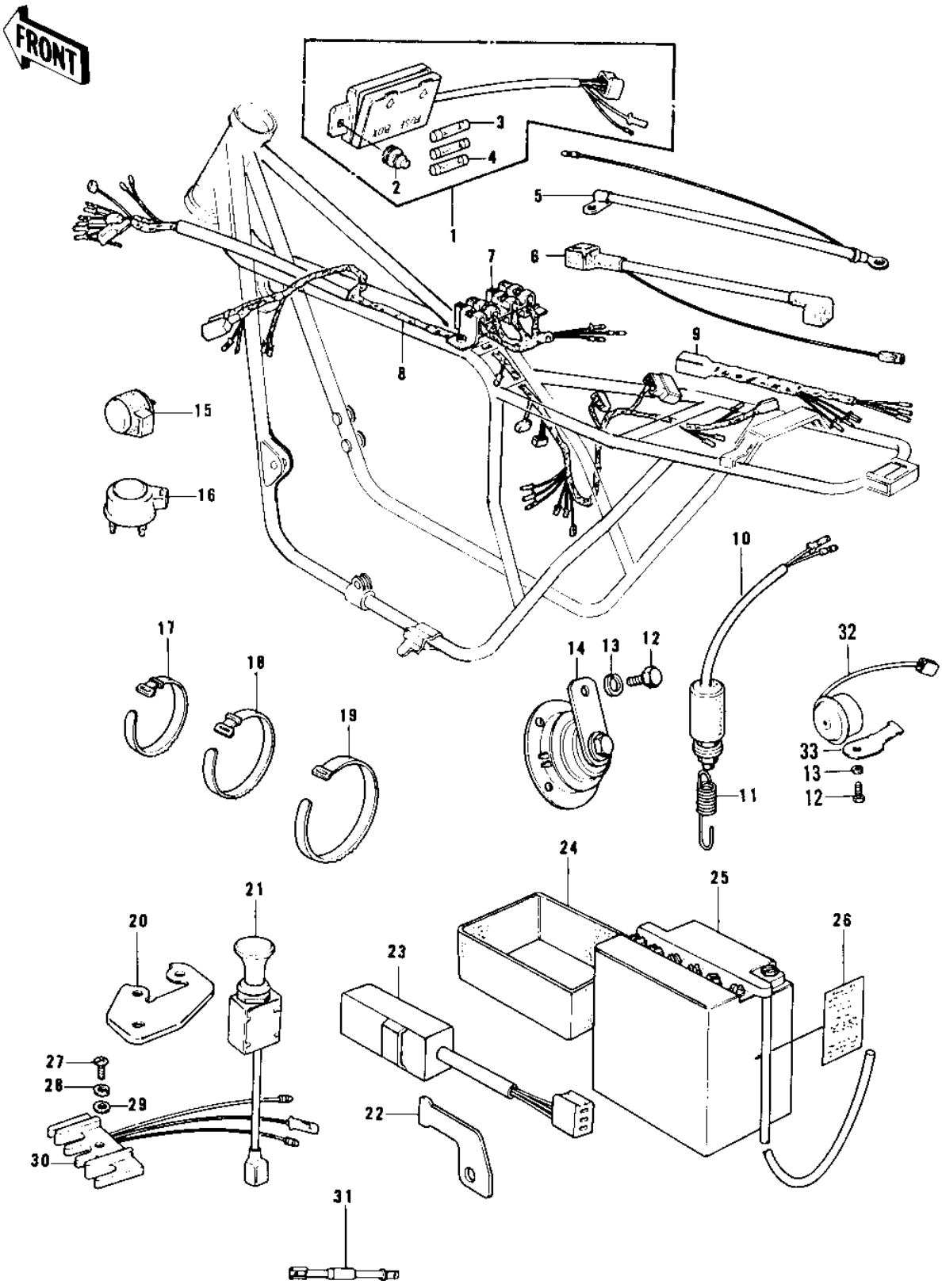

© 2026 Kawasaki Motors Corp., U.S.A.

1976 KZ900-A4

PARTS LIST

CHASSIS ELECTRICAL EQUIPMENT

ITEM NAME	PART NUMBER	QUANTITY
FUSE ASSY (Ref # 1)	26004-035	1
DAMPER RUBBER,FUSE (Ref # 2)	92075-279	1
FUSE-20A (Ref # 3)	26006-005	2
FUSE 10A (Ref # 4)	26006-003	3
WIRE,BATTERY GROUND (Ref # 5)	26010-043	1
WIRE,STARTER LEAD (Ref # 6)	26010-042	1
WIRING HARNESS,CENTER (Ref # 7)	26002-057	1
WIRING HARNESS,MAIN (Ref # 8)	26001-135	1
WIRING HARNESS,REAR (Ref # 9)	26002-031	1
SWITCH-BRAKE LAMP (Ref # 10)	27010-017	1
SPRING BRAKE LAMP SW (Ref # 11)	27011-009	1
BOLT-SMALL-UPSET,8X16 (Ref # 12)	110B0816	2
WASHER SPRING 8MM (Ref # 13)	461F0800	2
HORN (Ref # 14)	27003-065	1
RELAY-TURN SIGNAL (Ref # 15)	27002-011	1
RELAY,TURN SIGNAL (Ref # 16)	27002-016	1
BAND,SHORT (Ref # 17)	92072-030	5
BAND,LONG (Ref # 18)	92072-032	4
BAND,AIR CLEANER (Ref # 19)	92072-073	2
BKT,HAZARD SWITCH (Ref # 20)	32060-019	1
SWITCH,HAZARD (Ref # 21)	27014-008	1
BRACKET,OUTAGE SWITCH (Ref # 22)	32060-014	1
SWITCH,OUTAGE,INDICTR (Ref # 23)	28019-001	1
CASE,BATTERY (Ref # 24)	32099-015	1
YUA BAT YB10L-A2 (Ref # 25)	26012-041	1
LABEL-WARNING,BATTERY (Ref # 26)	56022-157	1
SCREW PAN HEAD 6X20 (Ref # 27)	220B0620	1
WASHER SPRING 6MM (Ref # 28)	461F0600	1
WASHER PLAIN 6MM (Ref # 29)	411B0600	1

© 2026 Kawasaki Motors Corp., U.S.A.

1976 KZ900-A4

PARTS LIST

CHASSIS ELECTRICAL EQUIPMENT

ITEM NAME	PART NUMBER	QUANTITY
REGULATOR,HAZARD (Ref # 30)	21066-024	1
REGULATOR (Ref # 31)	21066-026	1
ALARM,TURN SIGNAL (Ref # 32)	27040-002	1
BRACKET,ALARM (Ref # 33)	27023-005	1

© 2026 Kawasaki Motors Corp., U.S.A.