1982 GPz

PARTS DIAGRAM

OWNER TOOLS

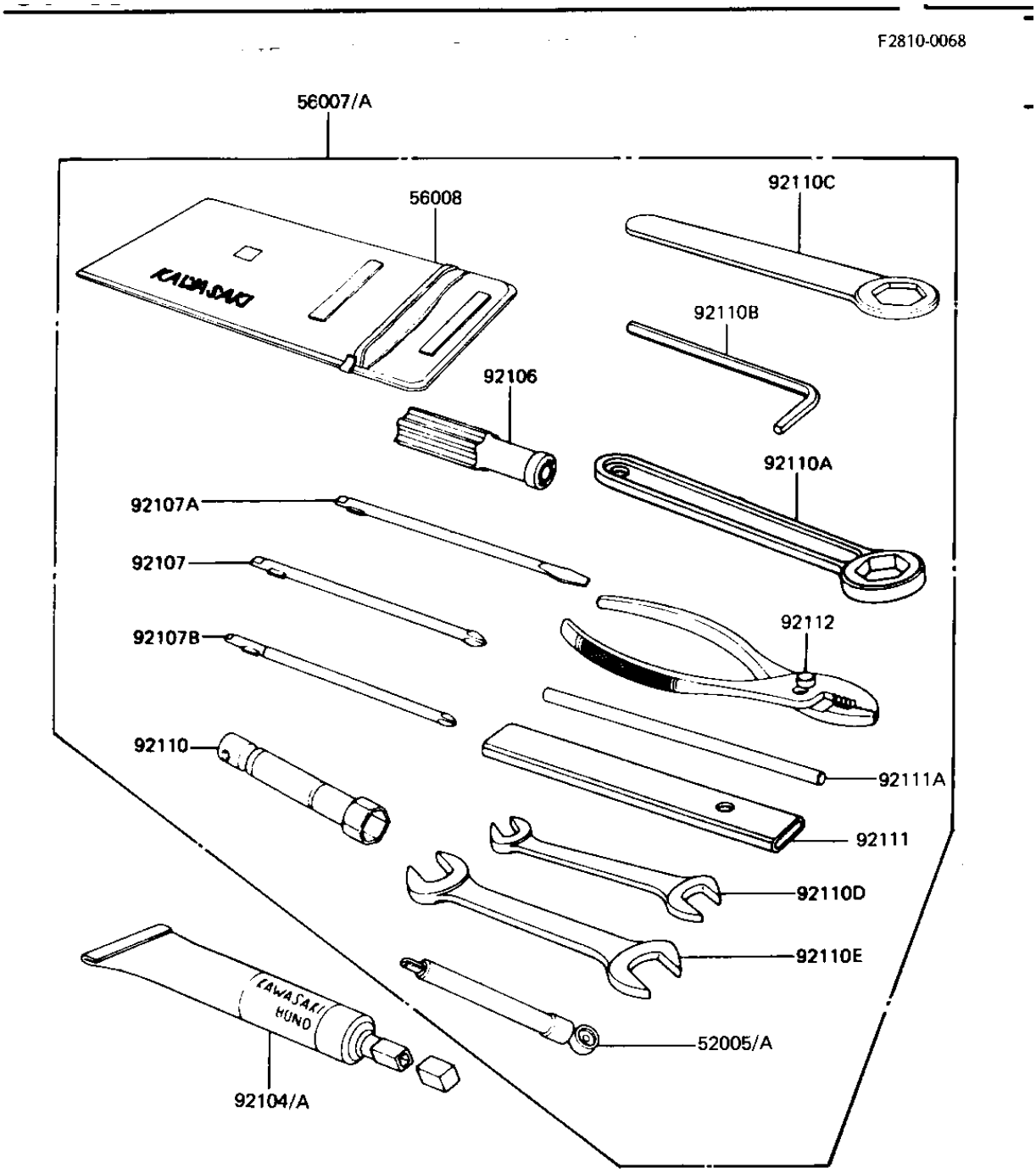

© 2026 Kawasaki Motors Corp., U.S.A.

1982 GPz

PARTS LIST

OWNER TOOLS

ITEM NAME	PART NUMBER	QUANTITY
GAUGE,AIR (Ref # 52005A)	52005-4002	1
56007-1121 (Canada) (Ref # 56007A)	56007-1139	1
BAG,TOOL (Ref # 56008)	56008-006	1
LIQUID GASKET (Ref # 92104)	92104-002	1
GASKET-LIQUID,BLACK (Ref # 92104A)	92104-1003	1
GRIP,SCREW DRIVER (Ref # 92106)	92106-1001	1
TOOL-DRIVER (Ref # 92107)	92107-1052	1
92107-1052 (Canada) (Ref # 92107A)	92107-007	1
92107-1002 (Canada) (Ref # 92107B)	92107-008	1
WRENCH,SPARK PLUG (Ref # 92110)	92108-008	1
TOOL-WRENCH,BOX END,2 (Ref # 92110A)	92110-1147	1
WRENCH,ALLEN (Ref # 92110B)	92110-1015	1
TOOL-WRENCH,BOX END,2 (Ref # 92110C)	92110-1148	1
TOOL-WRENCH,OPEN END (Ref # 92110D)	92110-1038	1
TOOL-WRENCH,OPEN END, (Ref # 92110E)	92110-1153	1
TOOL-WRENCH,OPEN END, (Ref # 92111)	92111-004	1
BAR,SPARK PLUG WRENCH (Ref # 92111A)	92111-005	1
PLIERS,160MM (Ref # 92112)	92112-003	1

© 2026 Kawasaki Motors Corp., U.S.A.