# 2008 800 SX-R

## PARTS DIAGRAM

### Jet Pump

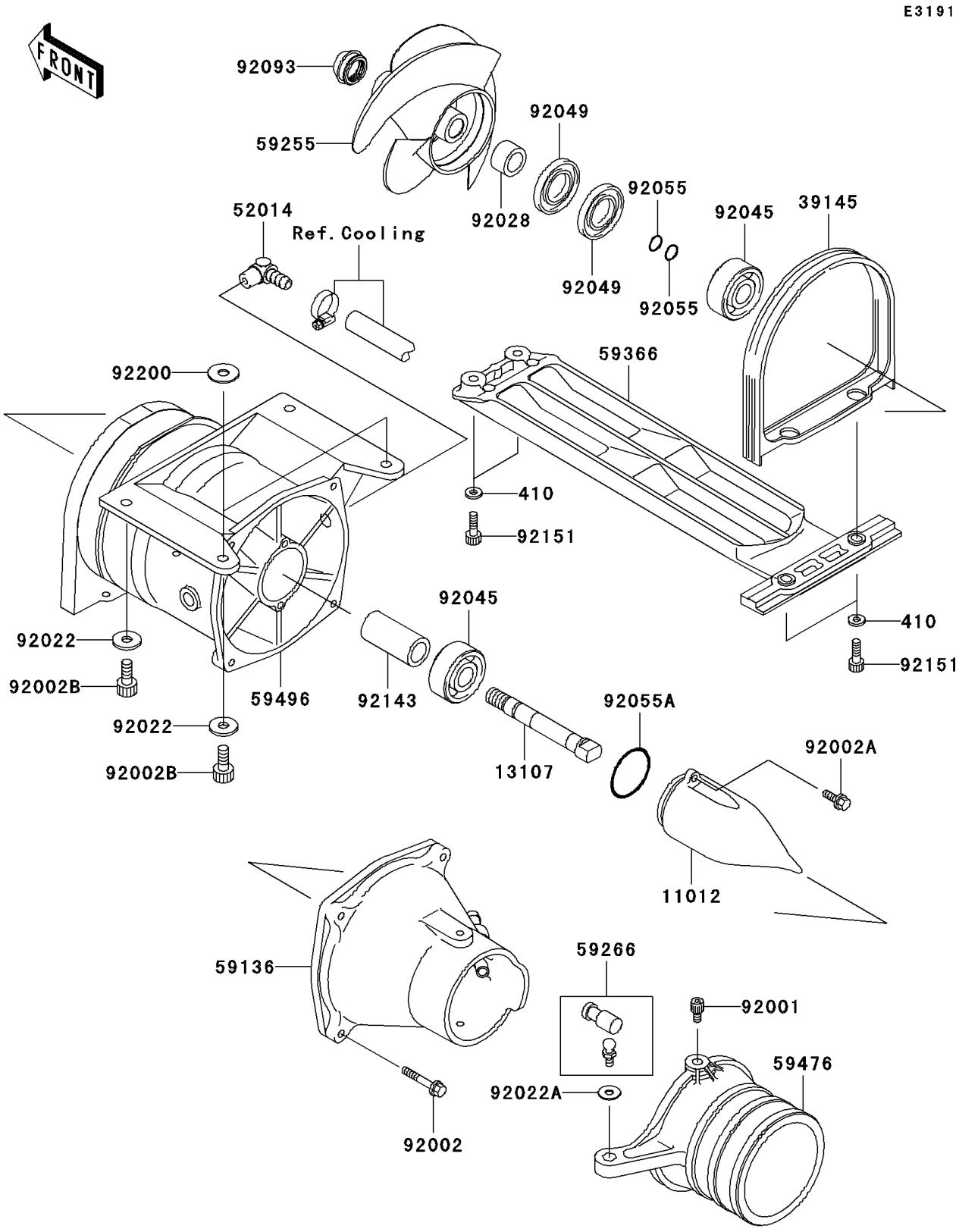


© 2026 Kawasaki Motors Corp., U.S.A.

# 2008 800 SX-R

## PARTS LIST

### Jet Pump

| ITEM NAME | PART NUMBER | QUANTITY |
|---|---|---|
| WASHER-PLAIN-SMALL,6MM (Ref # 410) | 410S0600 | 4 |
| CAP,JET PUMP (Ref # 11012) | 11012-3712 | 1 |
| SHAFT,JET PUMP (Ref # 13107) | 13107-3721 | 1 |
| TRIM-SEAL (Ref # 39145) | 39145-3735 | 1 |
| ELBOW (Ref # 52014) | 52014-3724 | 1 |
| NOZZLE-PUMP (Ref # 59136) | 59136-3730 | 1 |
| IMPELLER-COMP (Ref # 59255) | 59255-3726 | 1 |
| JOINT-BALL (Ref # 59266) | 59266-3707 | 1 |
| GRATE (Ref # 59366) | 59366-3721 | 1 |
| NOZZLE-STRG (Ref # 59476) | 59476-3713 | 1 |
| VANE-GUIDE (Ref # 59496) | 59496-3752 | 1 |
| BOLT,SOCKET,6X11 (Ref # 92001) | 92001-3701 | 2 |
| BOLT,6X35 (Ref # 92002) | 92002-3715 | 4 |
| BOLT,6X16 (Ref # 92002A) | 92002-3728 | 2 |
| BOLT,SOCKET,8X20 (Ref # 92002B) | 92002-3771 | 4 |
| WASHER,8.4X23X2.5 (Ref # 92022) | 92022-3744 | 4 |
| WASHER (Ref # 92022A) | 92022-567 | 1 |
| BUSHING,17X25X15 (Ref # 92028) | 92028-3717 | 1 |
| BEARING-BALL,#6303 2RS (Ref # 92045) | 92045-3746 | 2 |
| SEAL-OIL,TBY25X47X6 (Ref # 92049) | 92049-3714 | 2 |
| RING-O,13.0X1.9 (Ref # 92055) | 92055-1011 | 2 |
| RING-O (Ref # 92055A) | 92055-3706 | 1 |
| SEAL (Ref # 92093) | 92093-3749 | 1 |
| COLLAR,17.4X25.4X53 (Ref # 92143) | 92143-3708 | 1 |
| BOLT,SOCKET,6X20 (Ref # 92151) | 92151-3774 | 4 |
| WASHER,8.5X25X1.5 (Ref # 92200) | 92200-3717 | 2 |

© 2026 Kawasaki Motors Corp., U.S.A.