2008 800 SX-R

PARTS DIAGRAM

Drive Shaft

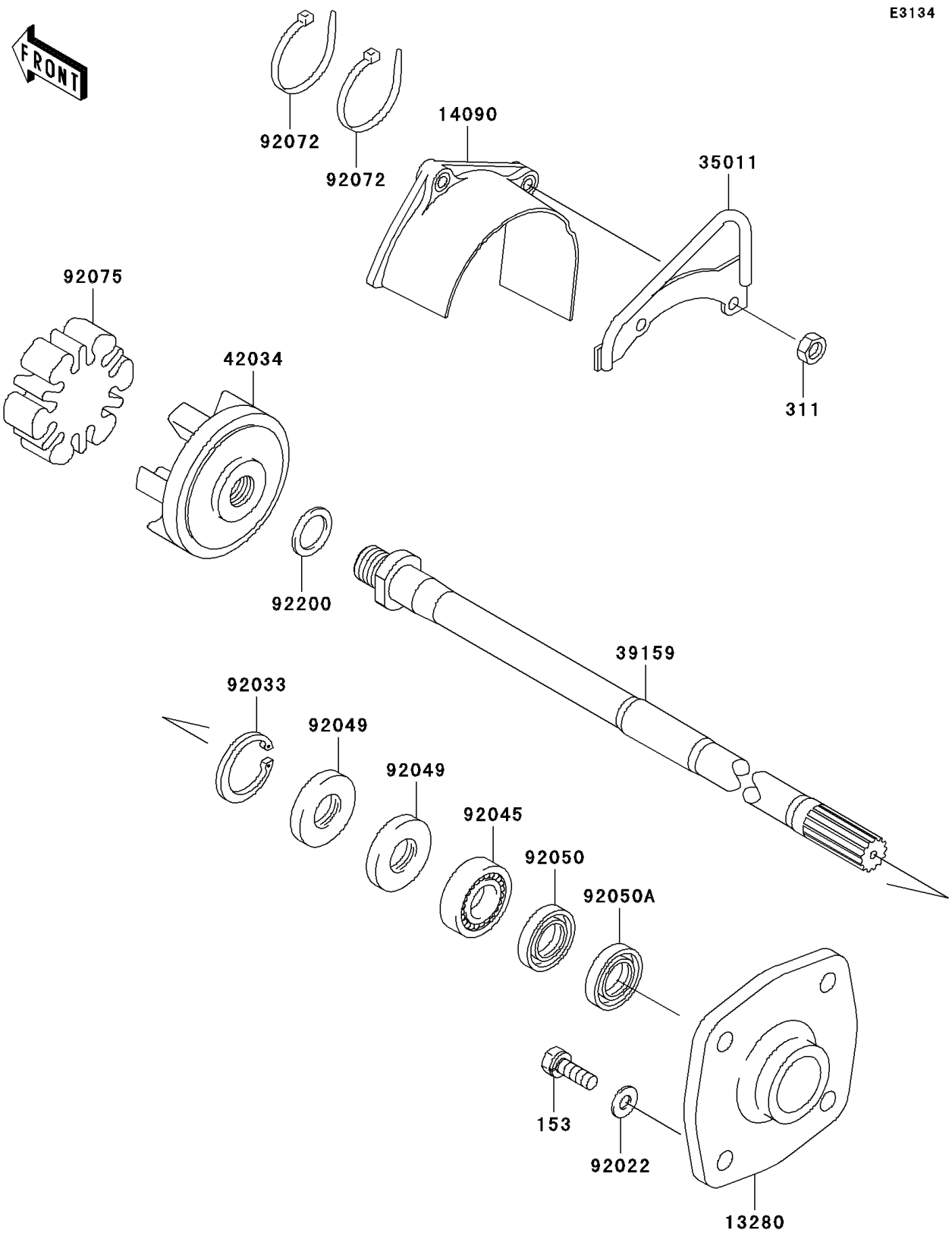

© 2026 Kawasaki Motors Corp., U.S.A.

2008 800 SX-R

PARTS LIST

Drive Shaft

ITEM NAME	PART NUMBER	QUANTITY

© 2026 Kawasaki Motors Corp., U.S.A.