2008 800 SX-R

PARTS DIAGRAM

Flame Arrester

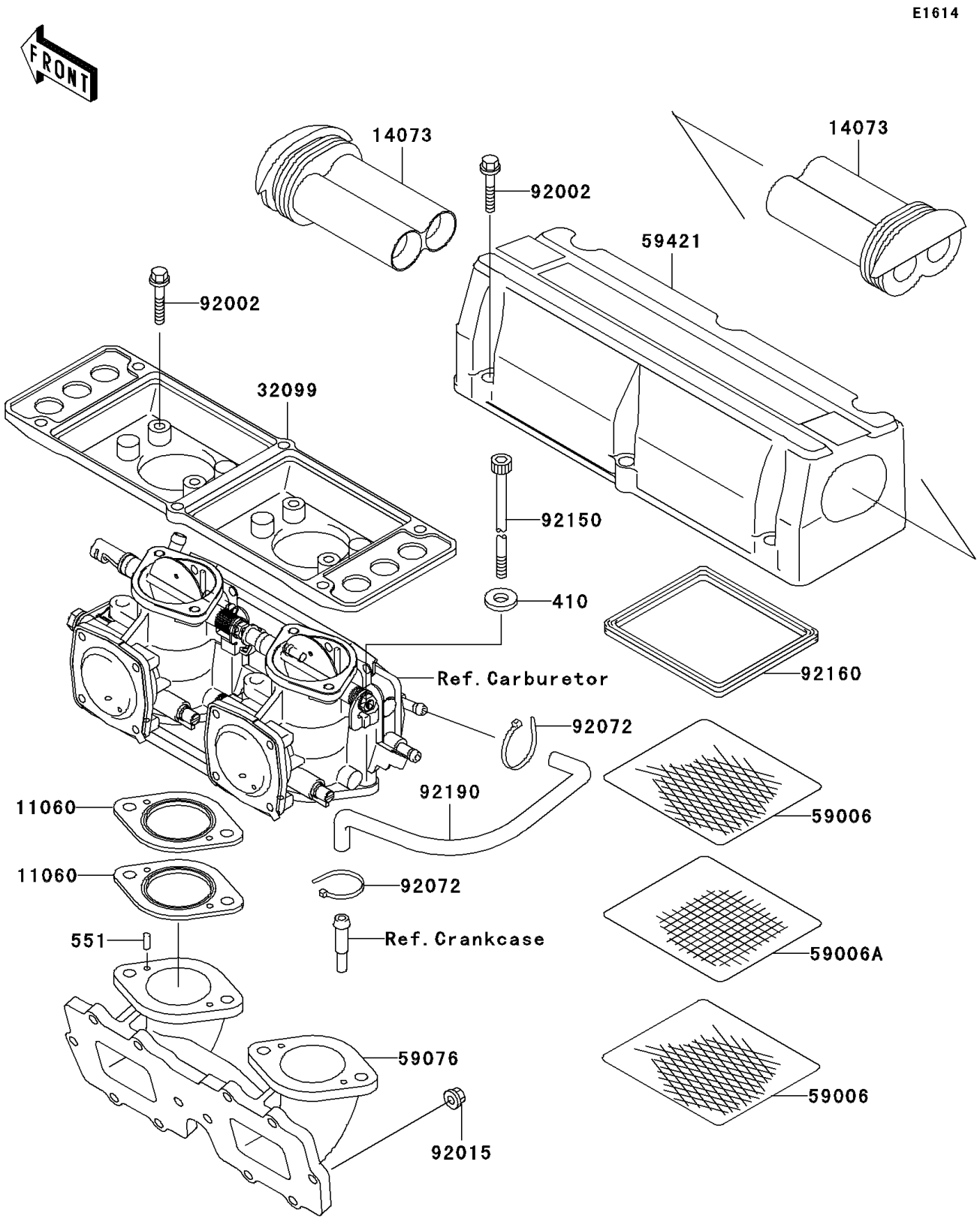

© 2026 Kawasaki Motors Corp., U.S.A.

2008 800 SX-R

PARTS LIST

Flame Arrester

ITEM NAME	PART NUMBER	QUANTITY
WASHER-PLAIN-SMALL,8MM (Ref # 410)	410S0800	4
PIN-DOWEL (Ref # 551)	551R0416	4
GASKET,CARBURETOR (Ref # 11060)	11060-3761	4
DUCT (Ref # 14073)	14073-3733	2
CASE (Ref # 32099)	32099-3801	1
ARRESTER-FLAME (Ref # 59006)	59006-3707	4
ARRESTER-FLAME (Ref # 59006A)	59006-3708	2
MANIFOLD-INTAKE (Ref # 59076)	59076-3730	1
COVER-INTAKE (Ref # 59421)	59421-3733	1
BOLT,6X30 (Ref # 92002)	92002-3726	10
NUT,CAP,6MM (Ref # 92015)	92015-1385	12
BAND,L=152 (Ref # 92072)	92072-3874	2
BOLT,SOCKET,8X85 (Ref # 92150)	92150-3852	4
DAMPER (Ref # 92160)	92160-3704	2
TUBE (Ref # 92190)	92190-3965	1

© 2026 Kawasaki Motors Corp., U.S.A.