1982 LTD

PARTS DIAGRAM

HEADLIGHT

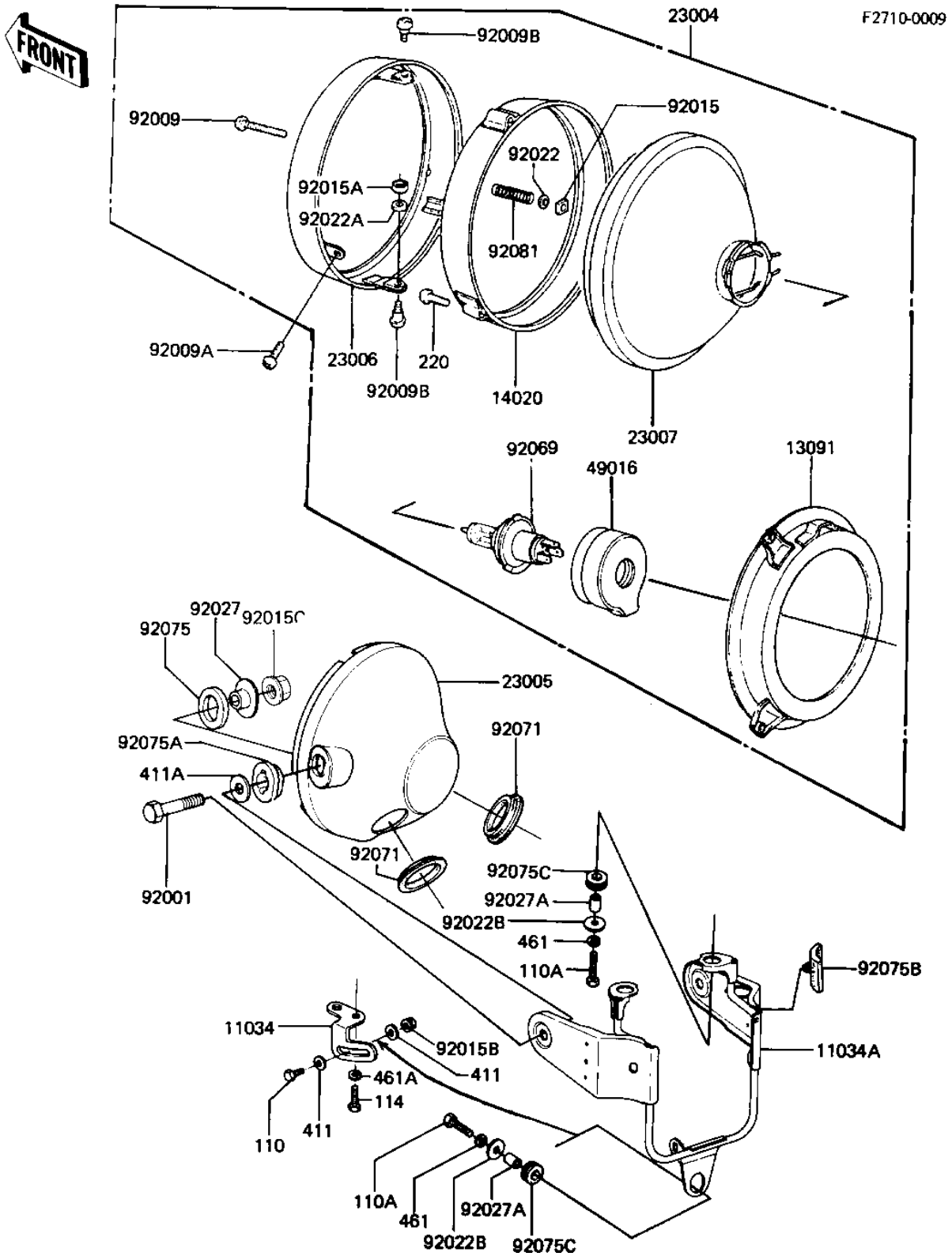

© 2026 Kawasaki Motors Corp., U.S.A.

1982 LTD

PARTS LIST

HEADLIGHT

Kawasaki
Let the Good Times Roll®

ITEM NAME	PART NUMBER	QUANTITY
BRACKET (Ref # 11034)	11034-1676	1
BRACKET,HEAD LAMP (Ref # 11034A)	11034-1939	1
RING,HEAD LAMP MOUNT (Ref # 13091)	23074-001	1
RING,HEAD LAMP MOUNT (Ref # 14020)	23072-001	1
LAMP-HEAD (Ref # 23004)	23004-1040	1
BODY-COMP-HEAD LAMP (Ref # 23005)	23005-1016	1
RIM,HEAD LAMP (Ref # 23006)	23006-038	1
LENS UNIT,HEAD LAMP (Ref # 23007)	23007-1009	1
DUST COVER (Ref # 49016)	49016-1016	1
BOLT,10MM (Ref # 92001)	92007-024	2
SCREW FORCUS ADJUST (Ref # 92009)	23019-021	1
SCREW,PAN HEAD,5X14 (Ref # 92009A)	23019-022	2
SCREW-PAN HEAD,5X12 (Ref # 92009B)	23019-023	2
NUT,4MM (Ref # 92015)	23020-018	1
NUT,HEAD LAMP RIM FI (Ref # 92015A)	23020-023	2
NUT-6MM (Ref # 92015B)	92015-1078	1
NUT,FLANGED,10MM (Ref # 92015C)	92015-1428	2
WASHER (Ref # 92022)	23021-004	1
WASHER-PLAIN,5MM (Ref # 92022A)	23021-012	2
WASHER 6.5X20X1.6T (Ref # 92022B)	92022-125	3
COLLAR,HEAD LIGHT (Ref # 92027)	23052-011	2
COLLAR,REAR FENDER (Ref # 92027A)	92027-162	3
BULB,12V-60/55W (Ref # 92069)	92069-1002	1
GROMMET (Ref # 92071)	92071-1008	2
DAMPER RUBBER (Ref # 92075)	23066-021	2
DAMPER RUBBER (Ref # 92075A)	23066-022	2
DAMPER RUBBER (Ref # 92075B)	92075-1243	2
DAMPER RUBBER,RR FEN (Ref # 92075C)	92075-209	3
SPRING FOCUS ADJUST (Ref # 92081)	23014-005	1

© 2026 Kawasaki Motors Corp., U.S.A.

1982 LTD

PARTS LIST

HEADLIGHT

ITEM NAME	PART NUMBER	QUANTITY
BOLT-UPSET 6X14 (Ref # 110)	112B0614	1
BOLT-UPSET (Ref # 110A)	112G0625	3
BOLT-SMALL-UPSET,8X1 (Ref # 114)	115G0816	1
SCREW PAN HEAD 3X12 (Ref # 220)	220B0312	2
WASHER PLAIN 6MM (Ref # 411)	411B0600	1
WASHER-PLAIN,10MM (Ref # 411A)	411D1000	2
WASHER SPRING 6MM (Ref # 461)	461F0600	3
WASHER SPRING 8MM (Ref # 461A)	461F0800	1

© 2026 Kawasaki Motors Corp., U.S.A.