1980 Police 1000

PARTS DIAGRAM

BATTERY CASE/ELECTRO BRACKET ('79-'81 C2

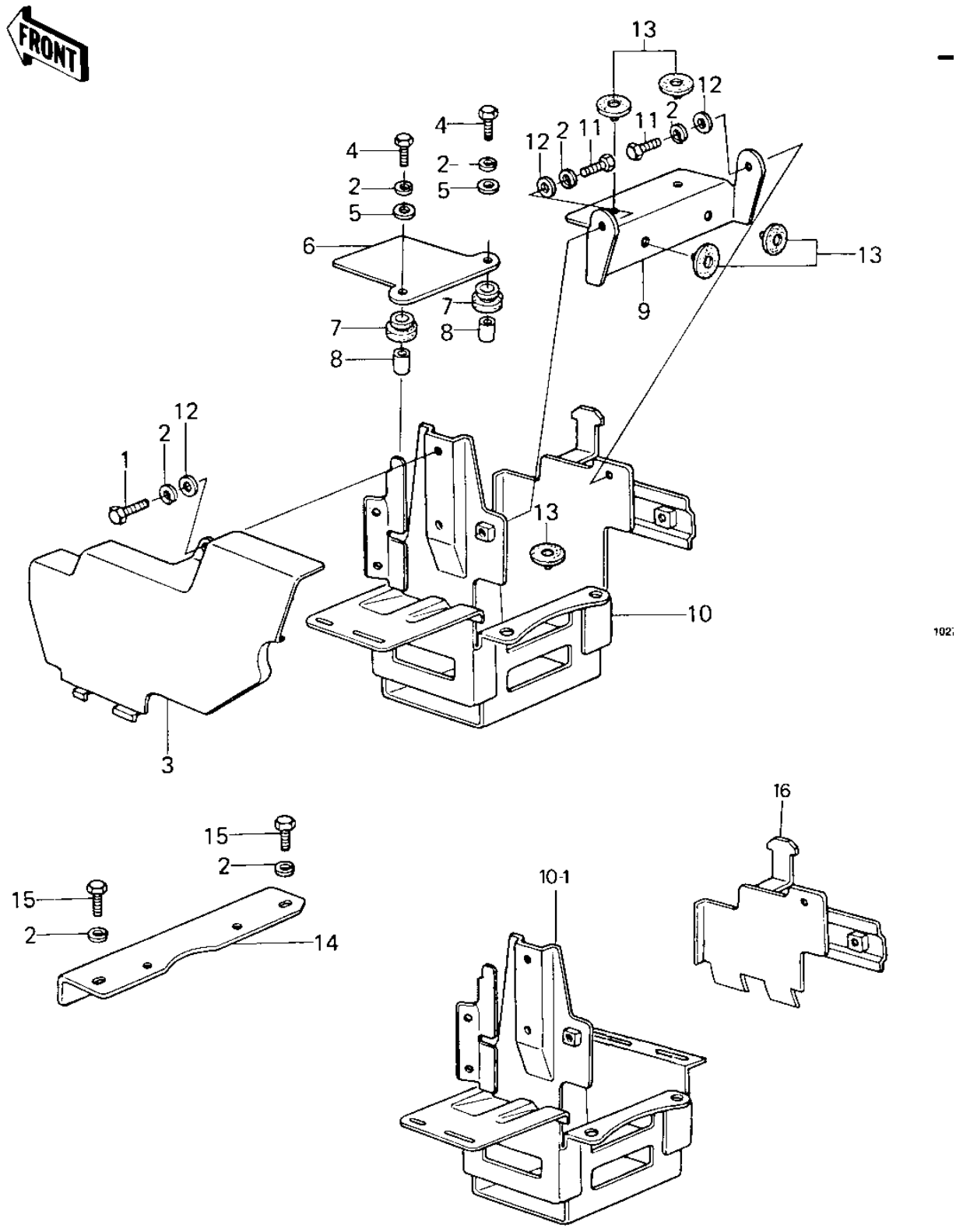

© 2026 Kawasaki Motors Corp., U.S.A.

1980 Police 1000

PARTS LIST

BATTERY CASE/ELECTRO BRACKET ('79-'81 C2

ITEM NAME	PART NUMBER	QUANTITY
BOLT-UPSET 6X14 (Ref # 1)	112B0614	1
WASHER SPRING 6MM (Ref # 2)	461F0600	9
BRACKET,BASE (Ref # 3)	11034-1180	1
BOLT-UPSET,6X40 (Ref # 4)	112G0640	4
WASHER,6.5X16X2 (Ref # 5)	92022-1565	4
STAY,AIR CLEANER (Ref # 6)	32105-007	1
DAMPER RUBBER,BTT CA (Ref # 7)	92075-146	4
COLLAR 6.8X10X14.5 (Ref # 8)	92027-156	4
BAND,BATTERY (Ref # 9)	32100-4001	1
CASE,BATTERY (Ref # 10-1)	32097-4001	1
BOLT-UPSET,6X12 (Ref # 11)	112G0612	3
WASHER PLAIN 6MM (Ref # 12)	410B0600	4
DAMPER RUBBER (Ref # 13)	92075-078	10
PLATE,BATTERY CASE (Ref # 14)	13169-4009	1
BOLT-UPSET,6X16 (Ref # 15)	112G0616	2
BRACKET,BASE,R.H (Ref # 16)	11034-4021	1

© 2026 Kawasaki Motors Corp., U.S.A.