1981 Police 1000

PARTS DIAGRAM

IGNITION (KZ1000-C3/C4)

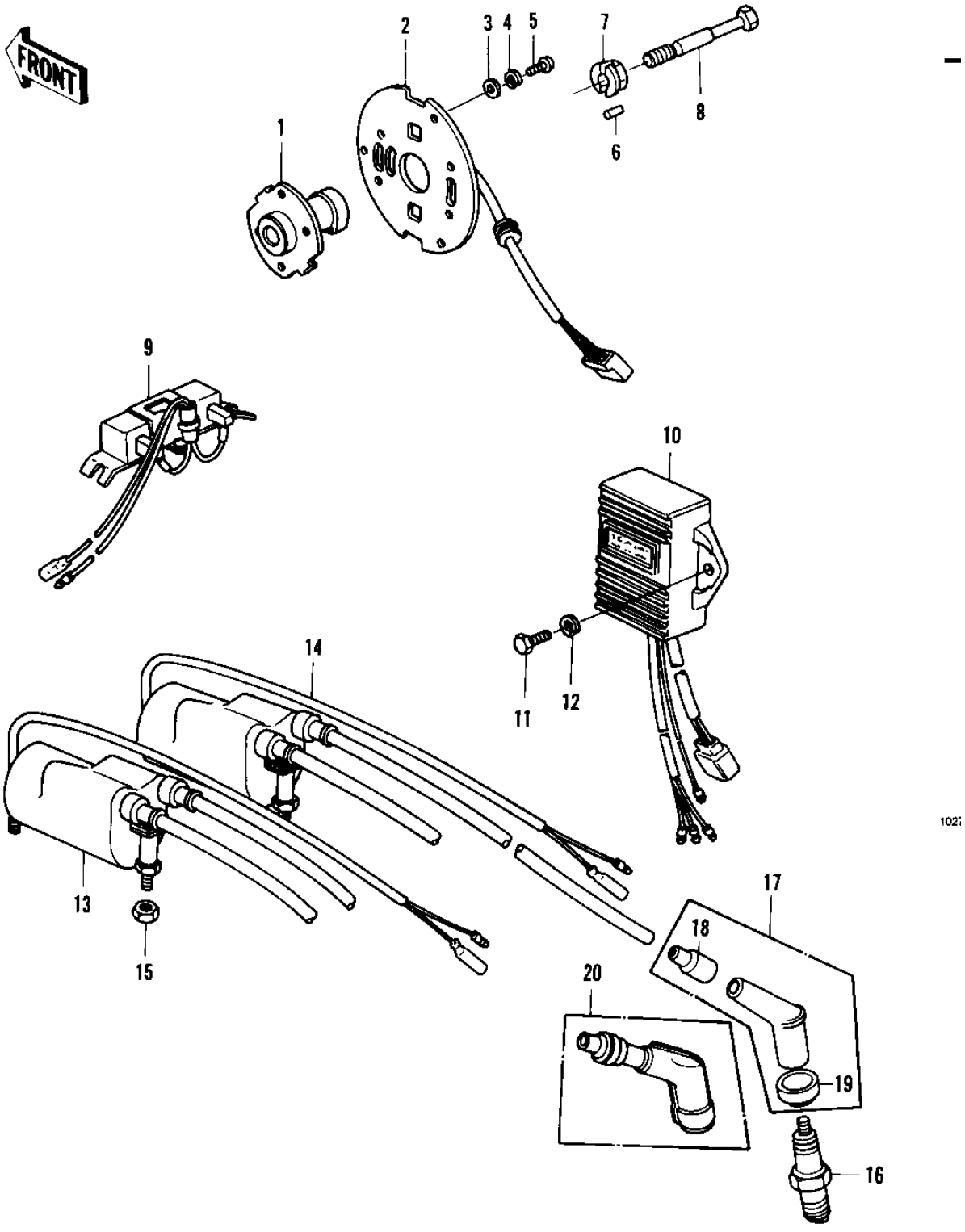

KZ

© 2026 Kawasaki Motors Corp., U.S.A.

1981 Police 1000

PARTS LIST

IGNITION (KZ1000-C3/C4)

ITEM NAME	PART NUMBER	QUANTITY
ADVANCER ASSY,SPARK (Ref # 1)	21148-1009	1
COIL-PULSING (Ref # 2)	59026-1012	1
COIL-PULSING (Ref # 2)	59026-1012	1
WASHER PLAIN 5MM (Ref # 3)	410B0500	3
WASHER SPRING 5MM (Ref # 4)	461F0500	3
SCREW PAN HEAD 5X12 (Ref # 5)	220B0512	3
PIN-SPRING,4X8 (Ref # 6)	555A0408	1
WASHER,SPARK ADVANCE (Ref # 7)	92022-244	1
BOLT,SPARK ADVANCER (Ref # 8)	92001-113	1
RESISTOR ASSY (Ref # 9)	28018-1018	1
IGNITER (Ref # 10)	21119-5001	1
BOLT-UPSET,6X16 (Ref # 11)	112G0616	2
WASHER SPRING 6MM (Ref # 12)	461F0600	2
COIL,IGNITION,NO.1&4 (Ref # 13)	21121-1013	1
COIL,IGNITION,NO.2&3 (Ref # 14)	21121-1014	1
NUT,LOCK 6MM (Ref # 15)	92017-014	4
SPARK PLUG B8ES (Ref # 16)	B8ES	4
CAP SPARK PLUG (Ref # 17)	21160-1014	4
CAP SPARK PLUG (Ref # 17)	21160-1014	4
GROMMET,SPARK PLG CA (Ref # 18)	21132-005	4
GROMMET-PLUG CAP,A (Ref # 19)	21131-004	4
CAP,SPARK PLUG (Ref # 20)	21160-005	4

© 2026 Kawasaki Motors Corp., U.S.A.