2005 800 SX-R

PARTS DIAGRAM

Handlebar

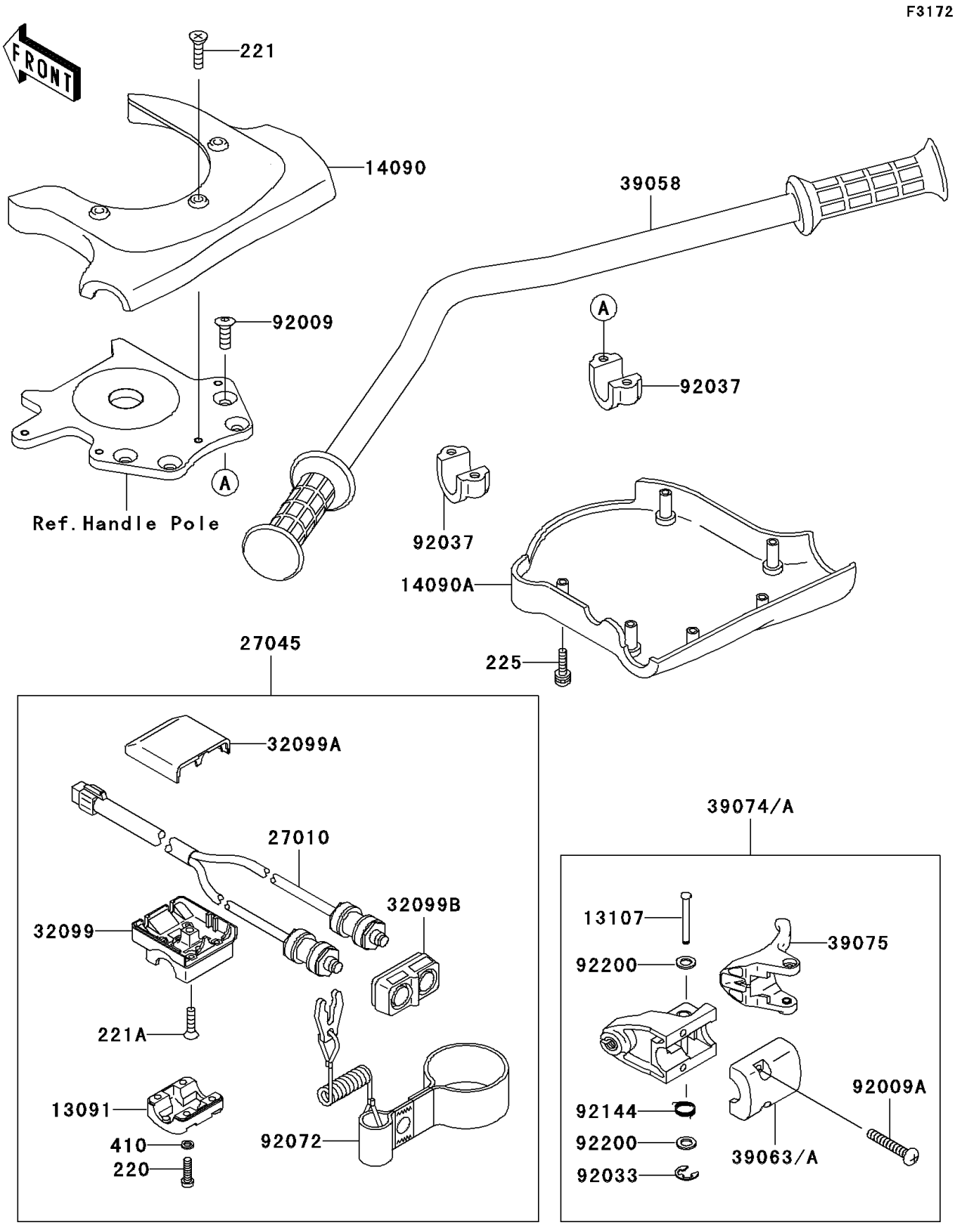

© 2026 Kawasaki Motors Corp., U.S.A.

2005 800 SX-R

PARTS LIST

Handlebar

ITEM NAME	PART NUMBER	QUANTITY
SCREW-PAN-CROS,5X20 (Ref # 220)	220R0520	4
SCREW-CSK-CROS,6X16 (Ref # 221)	221R0616	3
SCREW-CSK-CROS,6X25 (Ref # 221A)	221R0625	1
SCREW-PAN-WSP-CROS,5X20 (Ref # 225)	225R0520	6
W-PLAIN-S,5MM (Ref # 410)	410S0500	4
HOLDER,SWITCH (Ref # 13091)	13091-3726	1
SHAFT (Ref # 13107)	13107-3740	1
COVER,HANDLE,UPP,BLACK (Ref # 14090)	14090-3766-MA	1
COVER,HANDLE,LWR,BLACK (Ref # 14090A)	14090-3767-MA	1
SWITCH,STOP&START (Ref # 27010)	27010-3780	1
SWITCH-ASSY,STOP&START (Ref # 27045)	27045-3737	1
CASE,LWR,SWITCH (Ref # 32099)	32099-3725	1
CASE,UPP,SWITCH (Ref # 32099A)	32099-3726	1
CASE,FR,SWITCH (Ref # 32099B)	32099-3818	1
HANDLE-COMP,F.BLACK (Ref # 39058)	39058-3743-6Z	1
HOUSING-CONTROL (Ref # 39063A)	39063-3727	1
LEVER-ASSY-THROTTLE (Ref # 39074A)	39074-3726	1
LEVER-THROTTLE (Ref # 39075)	39075-3714	1
SCREW,8X22 (Ref # 92009)	92009-3701	4
SCREW,6X30 (Ref # 92009A)	92009-3837	2
RING-SNAP (Ref # 92033)	92033-3723	1
CLAMP,HANDLEBAR (Ref # 92037)	92037-503	2
BAND,TETHER SWITCH (Ref # 92072)	92072-3809	1
SPRING (Ref # 92144)	92144-3749	1
WASHER (Ref # 92200)	92200-3738	2

© 2026 Kawasaki Motors Corp., U.S.A.