2005 800 SX-R

PARTS DIAGRAM

Engine Mount

F3144

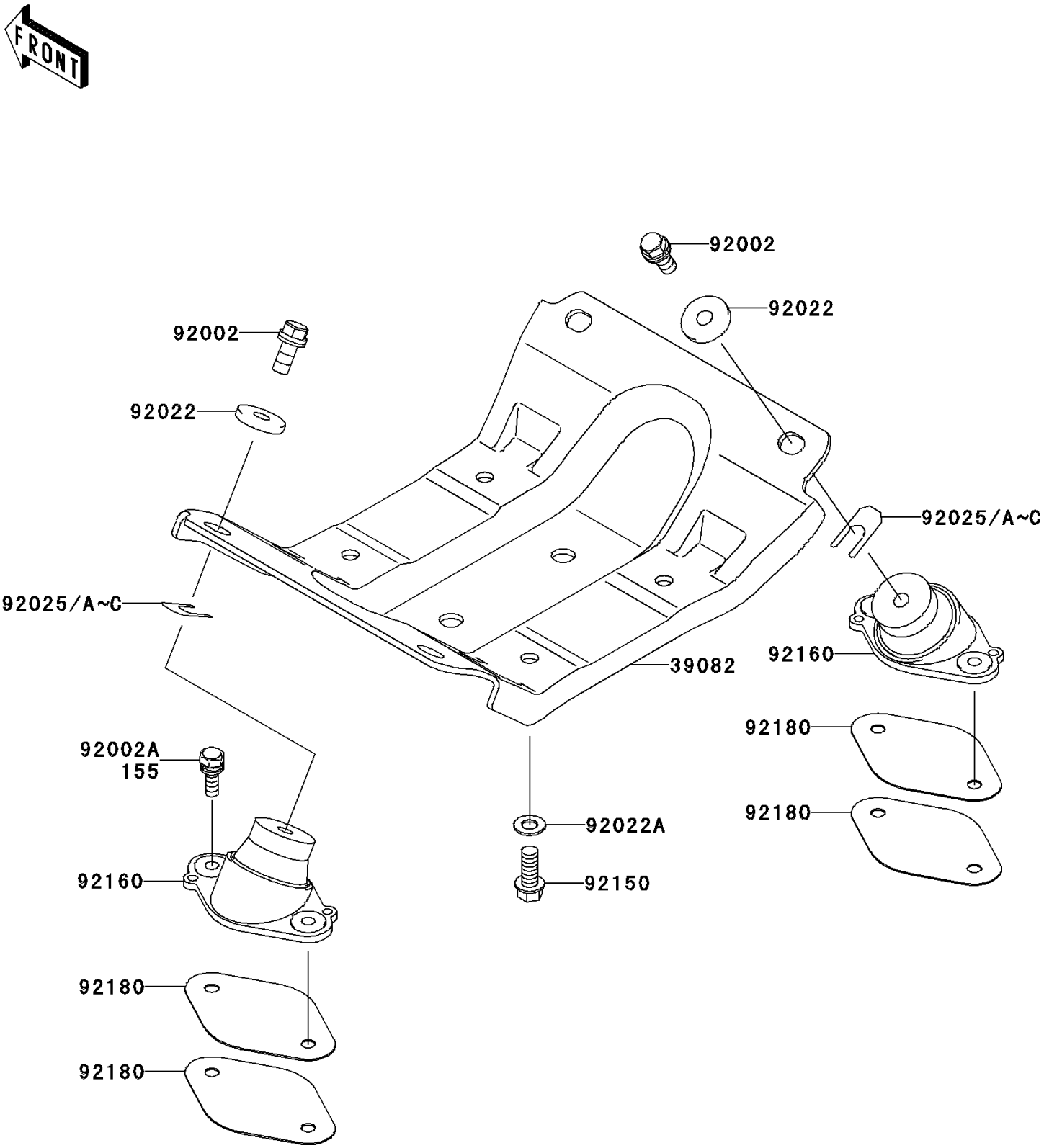

© 2026 Kawasaki Motors Corp., U.S.A.

2005 800 SX-R

PARTS LIST

Engine Mount

ITEM NAME	PART NUMBER	QUANTITY
BOLT-WSP-SMALL,8X30 (Ref # 155)	155R0830	8
MOUNT-ENGINE (Ref # 39082)	39082-3723	1
BOLT,10X25 (Ref # 92002)	92002-3770	4
WASHER,32X10.5X4 (Ref # 92022)	92022-3023	4
WASHER,10.2X20X1.5 (Ref # 92022A)	92022-3742	4
SHIM,T=0.3MM (Ref # 92025)	92025-3705	AR
SHIM,T=0.5MM (Ref # 92025A)	92025-3706	AR
SHIM,T=1.0MM (Ref # 92025B)	92025-3707	AR
SHIM,T=1.5MM (Ref # 92025C)	92025-3708	AR
BOLT,10X25 (Ref # 92150)	92150-3842	4
DAMPER,ENGINE MOUNT (Ref # 92160)	92160-3761	4
SHIM,T=1.0 (Ref # 92180)	92180-3715	AR

© 2026 Kawasaki Motors Corp., U.S.A.