2005 800 SX-R

PARTS DIAGRAM

Hull Fittings

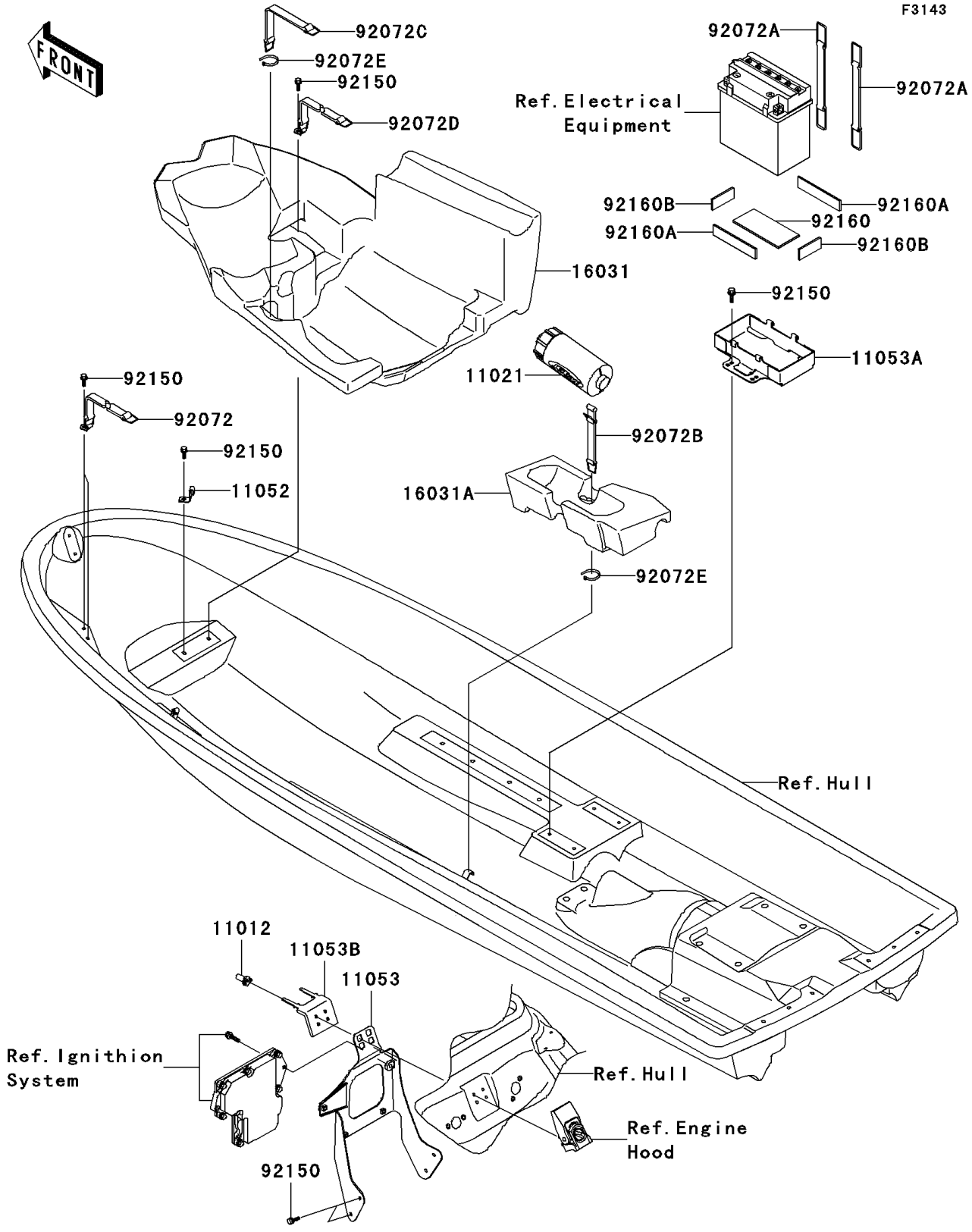

© 2026 Kawasaki Motors Corp., U.S.A.

2005 800 SX-R

PARTS LIST

Hull Fittings

ITEM NAME	PART NUMBER	QUANTITY
CAP,HOLDER (Ref # 11012)	11012-3768	2
CASE-ASSY,TOOL (Ref # 11021)	11021-3706	1
BRACKET (Ref # 11052)	11052-3773	1
BRACKET (Ref # 11053)	11053-3702	1
BRACKET,BATTERY (Ref # 11053A)	11053-3727	1
BRACKET (Ref # 11053B)	11053-3747	1
FLOAT,FUEL TANK (Ref # 16031)	16031-3919	1
FLOAT (Ref # 16031A)	16031-3941	1
BAND,OIL TANK (Ref # 92072)	92072-3812	2
BAND,BATTERY (Ref # 92072A)	92072-3841	2
BAND,TOOL CASE (Ref # 92072B)	92072-3859	1
BAND,FUEL TANK,LH (Ref # 92072C)	92072-3864	1
BAND,FUEL TANK,RH (Ref # 92072D)	92072-3865	1
BAND,L=99 (Ref # 92072E)	92072-3871	2
BOLT,6X20 (Ref # 92150)	92150-3758	12
DAMPER (Ref # 92160)	92160-1851	1
DAMPER (Ref # 92160A)	92160-3840	2
DAMPER,WATER MUFFLER (Ref # 92160B)	92160-3880	2

© 2026 Kawasaki Motors Corp., U.S.A.