2005 800 SX-R

PARTS DIAGRAM

Jet Pump

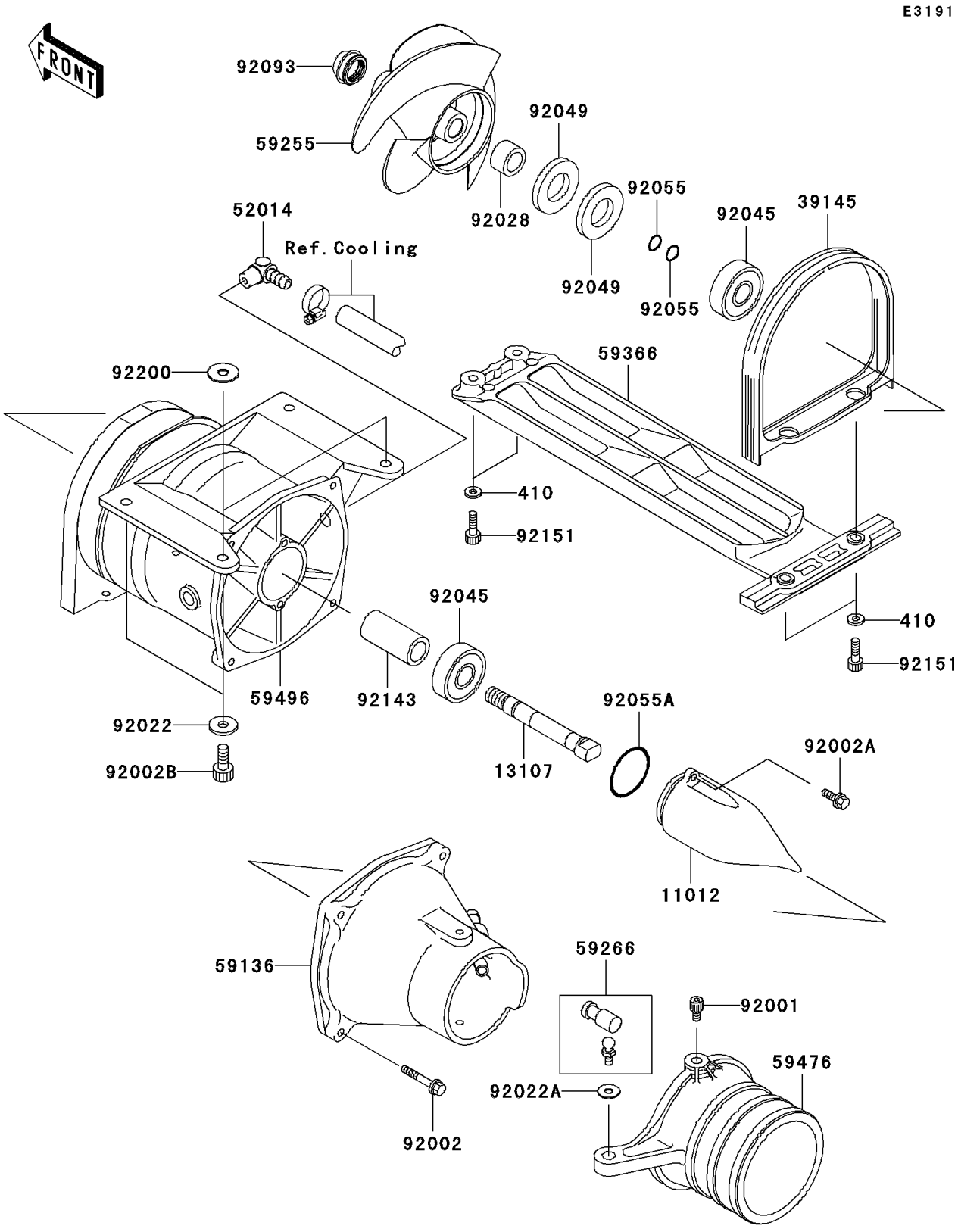

© 2026 Kawasaki Motors Corp., U.S.A.

2005 800 SX-R

PARTS LIST

Jet Pump

ITEM NAME	PART NUMBER	QUANTITY
WASHER-PLAIN-SMALL,6MM (Ref # 410)	410S0600	4
CAP,JET PUMP (Ref # 11012)	11012-3712	1
SHAFT,JET PUMP (Ref # 13107)	13107-3721	1
TRIM-SEAL (Ref # 39145)	39145-3735	1
ELBOW (Ref # 52014)	52014-3724	1
NOZZLE-PUMP (Ref # 59136)	59136-3730	1
IMPELLER-COMP (Ref # 59255)	59255-3726	1
JOINT-BALL (Ref # 59266)	59266-3707	1
GRATE (Ref # 59366)	59366-3721	1
NOZZLE-STRG (Ref # 59476)	59476-3713	1
VANE-GUIDE (Ref # 59496)	59496-3752	1
BOLT,SOCKET,6X11 (Ref # 92001)	92001-3701	2
BOLT,6X35 (Ref # 92002)	92002-3715	4
BOLT,6X16 (Ref # 92002A)	92002-3728	2
BOLT,SOCKET,8X20 (Ref # 92002B)	92002-3771	4
WASHER,8.4X23X2.5 (Ref # 92022)	92022-3744	4
WASHER (Ref # 92022A)	92022-567	1
BUSHING,17X25X15 (Ref # 92028)	92028-3717	1
BEARING-BALL,#63032RD (Ref # 92045)	92045-3706	2
SEAL-OIL,TBY25X47X6 (Ref # 92049)	92049-3714	2
RING-O,OIL FILTER (Ref # 92055)	92055-1011	2
RING-O (Ref # 92055A)	92055-3706	1
SEAL (Ref # 92093)	92093-3749	1
COLLAR,17.4X25.4X53 (Ref # 92143)	92143-3708	1
BOLT,SOCKET,6X20 (Ref # 92151)	92151-3774	4
WASHER,8.5X25X1.5 (Ref # 92200)	92200-3717	2

© 2026 Kawasaki Motors Corp., U.S.A.