1974 Z1

PARTS DIAGRAM

TURN SIGNAL

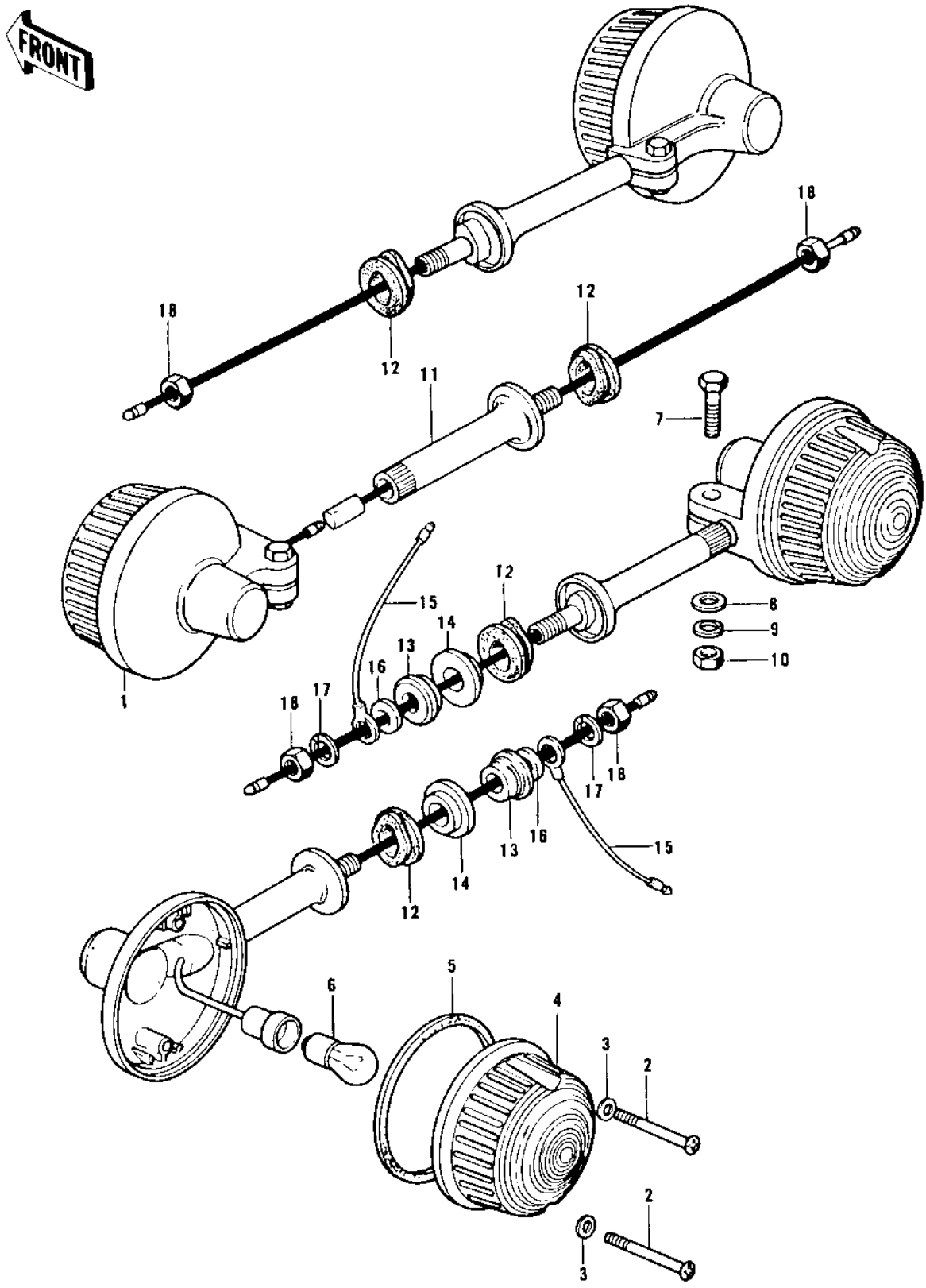

© 2026 Kawasaki Motors Corp., U.S.A.

1974 Z1
PARTS LIST
TURN SIGNAL

ITEM NAME	PART NUMBER	QUANTITY
LAMP ASSY,TURN SIGNAL (Ref # 1)	23040-034	
SCREW-PAN HEAD,4X35 (Ref # 2)	220E0435A	
WASHER-PLAIN,4MM (Ref # 3)	23058-002	
LENS-SIGNAL LAMP (Ref # 4)	23048-1024	
GASKET,TURN SIG LAMP (Ref # 5)	23050-002	
BULB 12V 32CP (Ref # 6)	92069-055	
BOLT HEX HEAD 6X30 (Ref # 7)	110N0630	
WASHER PLAIN 6MM (Ref # 8)	411B0600	
WASHER SPRING 6MM (Ref # 9)	461F0600	
NUT 6MM (Ref # 10)	310B0600	
BRACKET-TURN SIG LAMP (Ref # 11)	23078-001	
DAMPER RUBBER (Ref # 12)	92075-128	
COLLAR (Ref # 13)	92027-147	
DAMPER RUBBER,SIG LM (Ref # 14)	92075-158	
LEAD WIRE,SIGNAL LAMP (Ref # 15)	26011-063	
WASHER,PLAIN (Ref # 16)	92022-239	
WASHER SPRING 10MM (Ref # 17)	461F1000	
NUT 10MM (Ref # 18)	315B1000	

© 2026 Kawasaki Motors Corp., U.S.A.