1974 Z1

PARTS DIAGRAM

TAILLIGHT

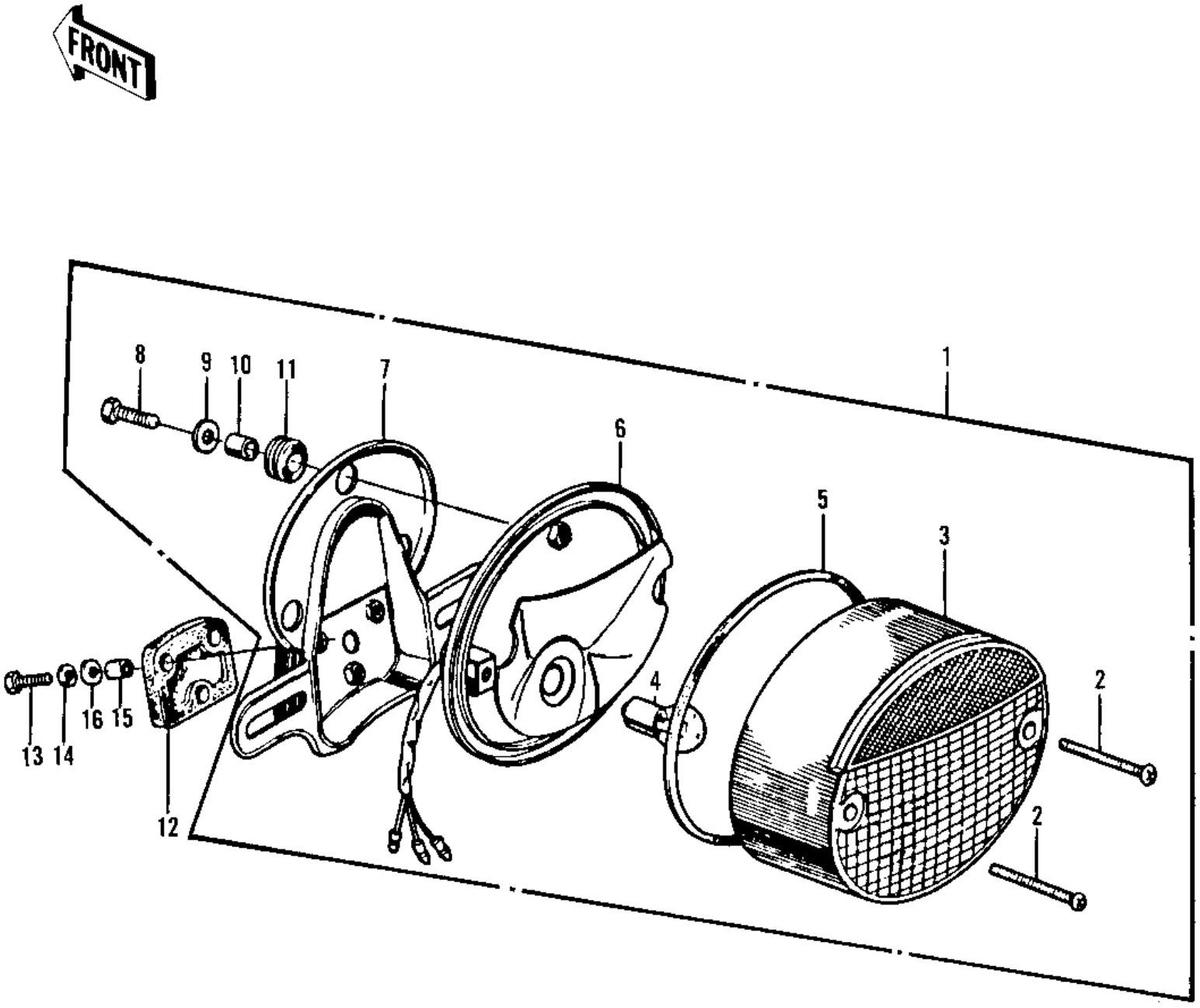

© 2026 Kawasaki Motors Corp., U.S.A.

1974 Z1
PARTS LIST
TAILLIGHT

ITEM NAME	PART NUMBER	QUANTITY
LAMP ASSY,TAIL (Ref # 1)	23024-018	
SCREW-PAN HEAD,4X35 (Ref # 2)	220E0435A	
LENS-TAIL LAMP (Ref # 3)	23026-023	
BULB,12V 32/3CP (Ref # 4)	92069-059	
GASKET-TAIL LAMP LENS (Ref # 5)	23028-018	
CASE,TAIL LAMP (Ref # 6)	23027-030	
BRACKET,TAIL LAMP (Ref # 7)	23036-017	
BOLT-UPSET,6X20 (Ref # 8)	112G0620	
WASHER 6.5X20X1.6T (Ref # 9)	92022-125	
COLLAR,6.8X10X8.5 (Ref # 10)	92027-129	
DAMPER RUBBER (Ref # 11)	92075-076	
DAMPER RUBBER,RR FEND (Ref # 12)	35039-004	
BOLT-UPSET (Ref # 13)	112G0625	
WASHER SPRING 6MM (Ref # 14)	461F0600	
COLLAR 6.8X10X14.5 (Ref # 15)	92027-156	
DAMPER RUBBER,RR FEND (Ref # 16)	92075-121	

© 2026 Kawasaki Motors Corp., U.S.A.