1974 Z1

PARTS DIAGRAM

SIDE COVERS/OIL TANK

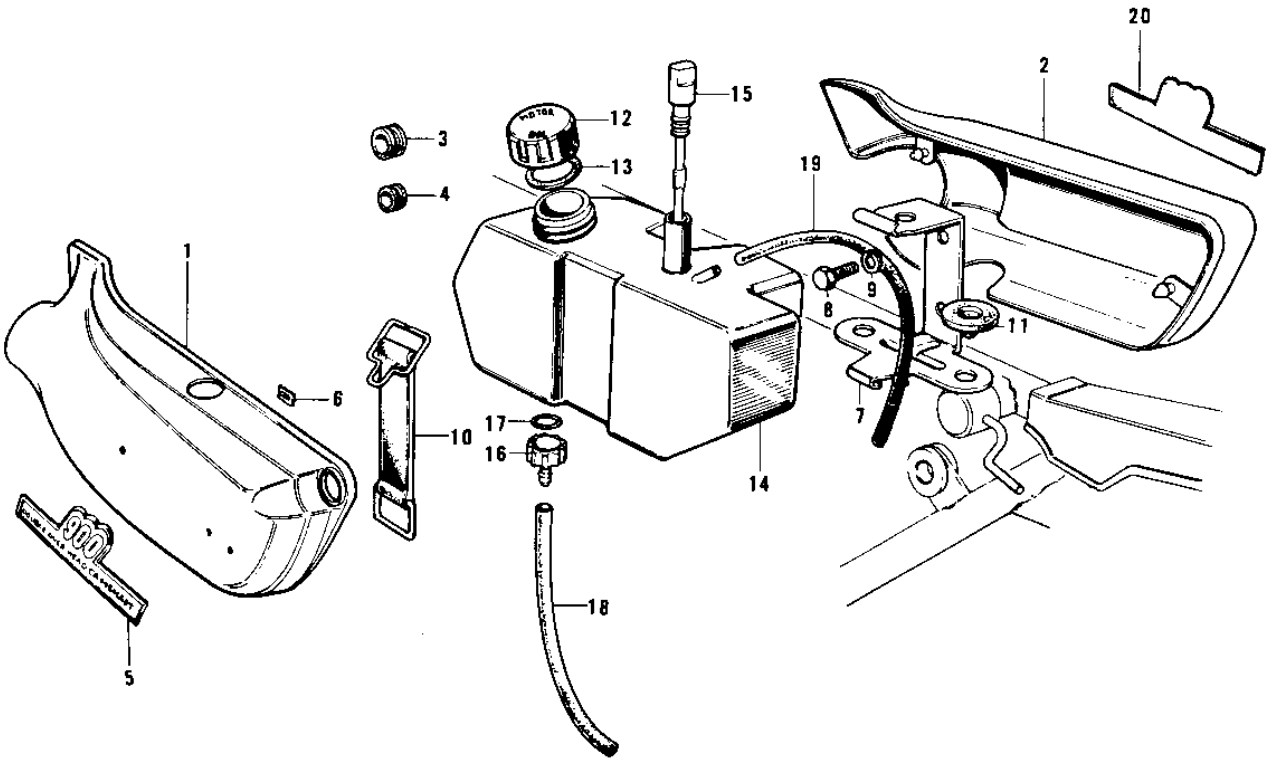

© 2026 Kawasaki Motors Corp., U.S.A.

1974 Z1

PARTS LIST

SIDE COVERS/OIL TANK

ITEM NAME	PART NUMBER	QUANTITY
COVER,L.H SIDE,C.BRWN (Ref # 1)	36001-036-96	
COVER,L.H SIDE,ORANGE (Ref # 1)	36001-036-2E	
COVER,L.H SIDE,YELLOW (Ref # 1)	36001-036-2F	
COVER,L.H SIDE,C.RED (Ref # 1)	36001-036-2R	
COVER,L.H SIDE,C.BLUE (Ref # 1)	36001-036-2S	
COVER,R.H SIDE,C.BRWN (Ref # 2)	36007-030-96	
COVER,RH SIDE,ORANGE (Ref # 2)	36007-030-2E	
COVER,RH SIDE,YELLOW (Ref # 2)	36007-030-2F	
COVER,RH SIDE,C.RED (Ref # 2)	36007-030-2R	
COVER,RH SIDE,C.BLUE (Ref # 2)	36007-030-2S	
GROMMET (Ref # 3)	92071-056	
GROMMET,SIDE COVER (Ref # 4)	92071-064	
EMBLEM,SIDE COVER (Ref # 5)	56018-139	
EMBLEM,L.H SIDE COVER (Ref # 5)	56018-197	
NUT,LOCK,3MM (Ref # 6)	92018-005	
NUT,LOCK,3MM (Ref # 6)	92018-005	
BRACKET,OIL TANK (Ref # 7)	32131-001	
BOLT HEX HEAD 6X12 (Ref # 8)	116B0612	
WASHER SPRING 6MM (Ref # 9)	461F0600	
BAND,OIL TANK (Ref # 10)	92072-045	
DAMPER RUBBER (Ref # 11)	92075-078	
CAP-OIL TANK (Ref # 12)	52003-020	
GASKET-OIL TANK (Ref # 13)	92065-086	
TANK,OIL (Ref # 14)	52001-031	
GAUGE,OIL LEVEL (Ref # 15)	52005-005	
FILTER-OIL (Ref # 16)	52020-001	
"O" RING,15MM (Ref # 17)	670B2015	
PIPE-OIL (Ref # 18)	92059-072	
PIPE,OIL TANK (Ref # 19)	92059-057	

© 2026 Kawasaki Motors Corp., U.S.A.