1974 Z1

PARTS DIAGRAM

CAMSHAFTS/VALVES

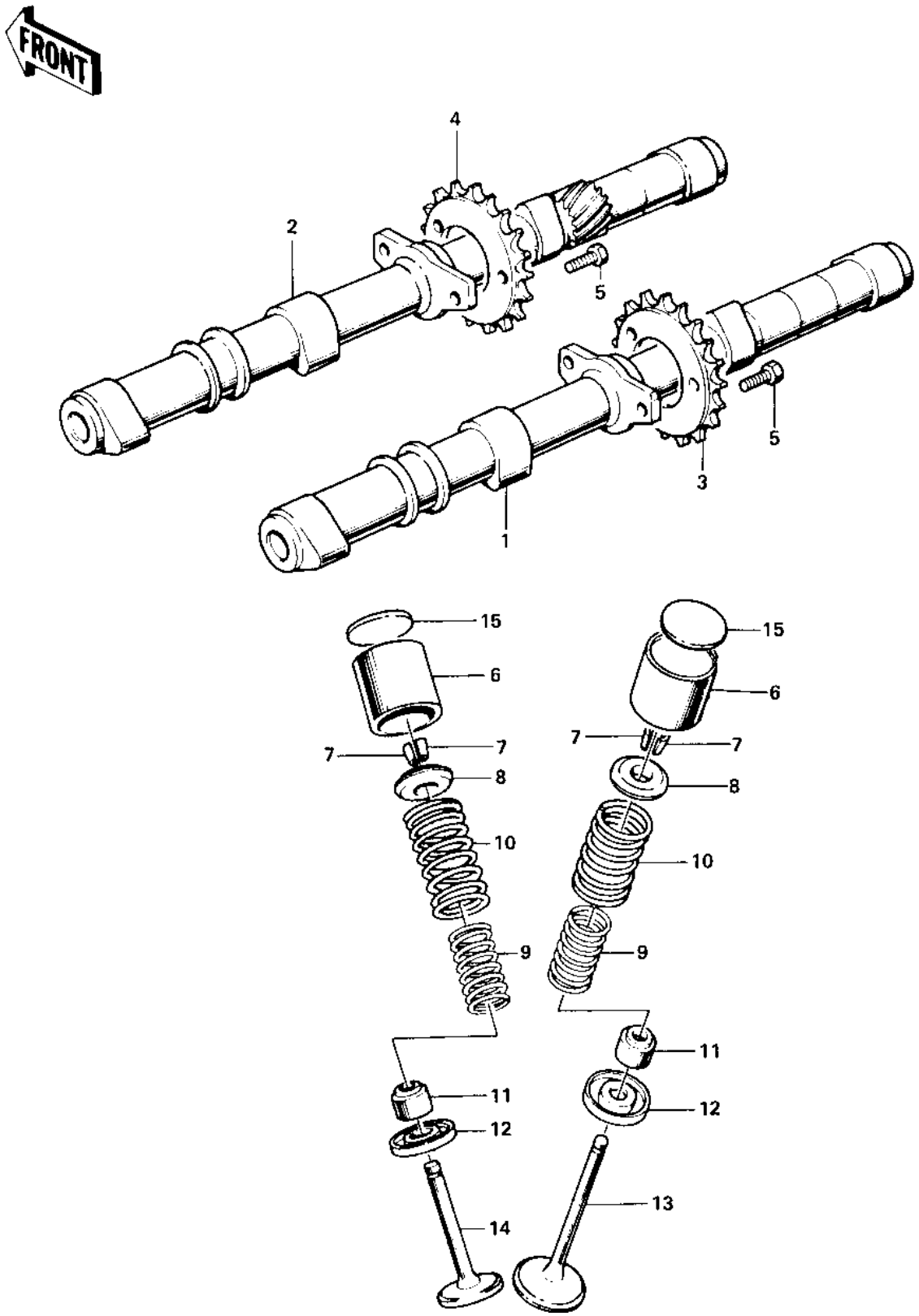

© 2026 Kawasaki Motors Corp., U.S.A.

1974 Z1

PARTS LIST

CAMSHAFTS/VALVES

Kawasaki
Let the Good Times Roll®

ITEM NAME	PART NUMBER	QUANTITY
CAMSHAFT,INLET (Ref # 1)	12044-014	
CAMSHAFT,INLET (Ref # 1)	12044-014	
CAMSHAFT,EXHAUST (Ref # 2)	12044-015	
CAMSHAFT,EXHAUST (Ref # 2)	12044-015	
SPROCKET,CAM SHAFT IN (Ref # 3)	12046-001	
SPROCKET,CAM SHAFT EX (Ref # 4)	12046-002	
BOLT,SPROCKET FITTING (Ref # 5)	92003-208	
TAPPET (Ref # 6)	12032-005	
COLLAR,VALUE SPRING (Ref # 7)	12011-002	
RETAINER,VALVE SPRING (Ref # 8)	12009-005	
SPRING,INNER VALVE (Ref # 9)	12007-011	
SPRING,OUTER VALVE (Ref # 10)	12007-012	
OIL SEAL,RV37129.5 (Ref # 11)	92049-016	
SEAT-SPRING,VALVE (Ref # 12)	16007-1024	
VALVE,INLET (Ref # 13)	12004-012	
VALVE,EXHAUST (Ref # 14)	12005-005	
SHIM,TAPPET,2.00T (Ref # 15)	12037-001	
SHIM,TAPPET,2.05T (Ref # 15)	12037-002	
SHIM,TAPPET,2.10T (Ref # 15)	12037-003	
SHIM,TAPPET,2.15T (Ref # 15)	12037-004	
SHIM,TAPPET,2.20T (Ref # 15)	12037-005	
SHIM,TAPPET,2.25T (Ref # 15)	12037-006	
SHIM,TAPPET,2.30T (Ref # 15)	12037-007	
SHIM,TAPPET,2.35T (Ref # 15)	12037-008	
SHIM,TAPPET,2.40T (Ref # 15)	12037-009	
SHIM,TAPPET,2.45T (Ref # 15)	12037-010	
SHIM,TAPPET,2.50T (Ref # 15)	12037-011	
SHIM,TAPPET,2.55T (Ref # 15)	12037-012	
SHIM,TAPPET,2.60T (Ref # 15)	12037-013	

© 2026 Kawasaki Motors Corp., U.S.A.

1974 Z1

PARTS LIST

CAMSHAFTS/VALVES

ITEM NAME	PART NUMBER	QUANTITY
SHIM,TAPPET,2.65T (Ref # 15)	12037-014	
SHIM,TAPPET,2.70T (Ref # 15)	12037-015	
SHIM,TAPPET,2.75T (Ref # 15)	12037-016	
SHIM,TAPPET,2.80T (Ref # 15)	12037-017	
SHIM,TAPPET,2.85T (Ref # 15)	12037-018	
SHIM,TAPPET,2.90T (Ref # 15)	12037-019	
SHIM,TAPPET,2.95T (Ref # 15)	12037-020	
SHIM,TAPPET,3.00T (Ref # 15)	12037-021	
SHIM,TAPPET,3.05T (Ref # 15)	12037-022	
SHIM,TAPPET,3.10T (Ref # 15)	12037-023	
SHIM,TAPPET,3.15T (Ref # 15)	12037-024	
SHIM,TAPPET 3.20T (Ref # 15)	12037-025	

© 2026 Kawasaki Motors Corp., U.S.A.