1976 KZ750-B1

PARTS DIAGRAM

SEAT

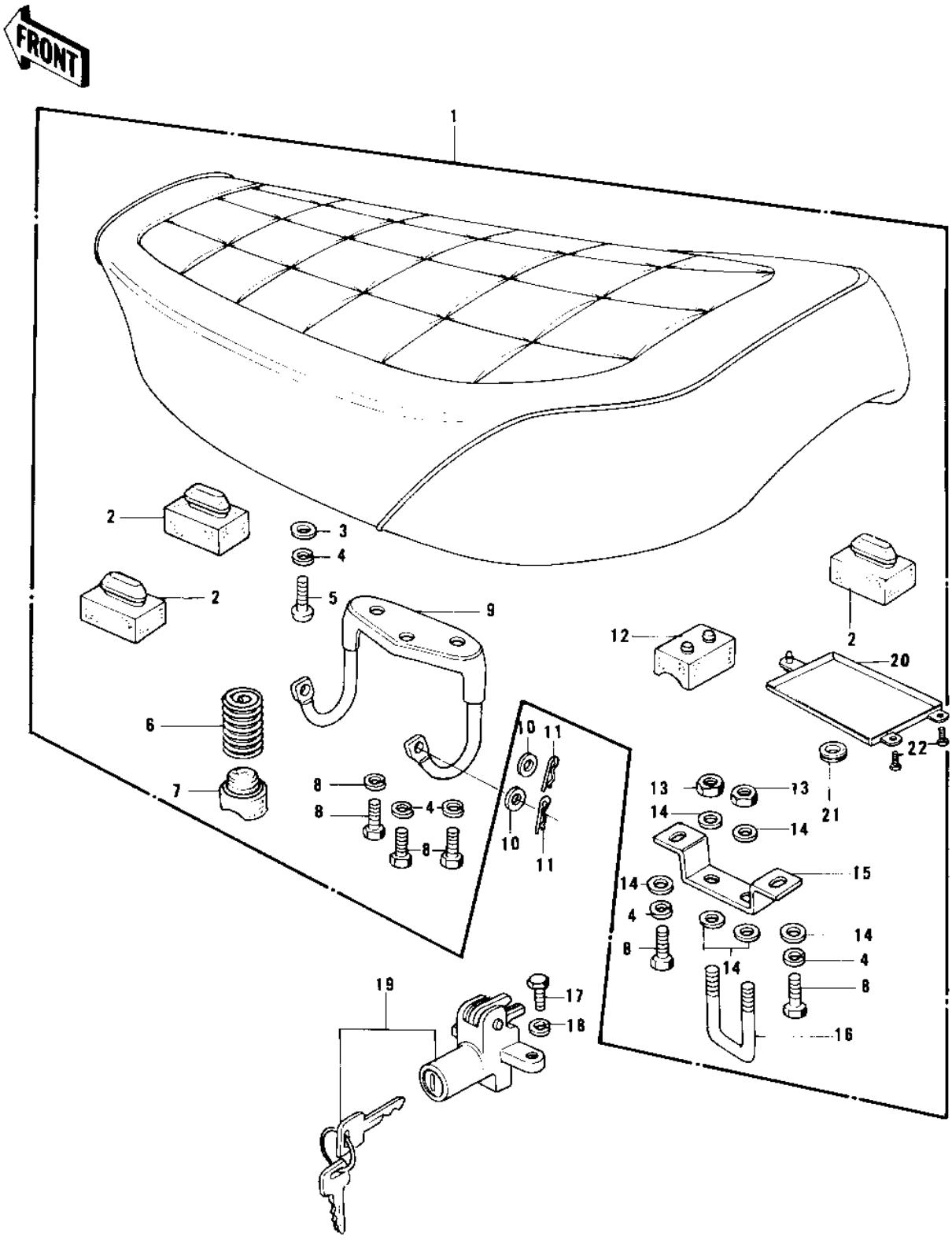

© 2026 Kawasaki Motors Corp., U.S.A.

1976 KZ750-B1

PARTS LIST

SEAT

ITEM NAME	PART NUMBER	QUANTITY
SEAT-ASSY,DUAL (Ref # 1)	53001-114	1
DAMPER RUBBER (Ref # 2)	92075-099	4
WASHER PLAIN 6MM (Ref # 3)	411B0600	1
WASHER SPRING 6MM (Ref # 4)	461F0600	6
SCREW PAN HEAD 6X14 (Ref # 5)	220B0614	1
SPRING (Ref # 6)	92081-147	1
DAMPER RUBBER (Ref # 7)	92075-276	1
BOLT-UPSET 6X14 (Ref # 8)	112B0614	5
HINGE (Ref # 9)	53009-029	1
WASHER PLAIN 8MM (Ref # 10)	411B0800	2
PIN,SNAP (Ref # 11)	554A0800	2
DAMPER RUBBER,SEAT (Ref # 12)	92075-139	1
NUT 6MM (Ref # 13)	311B0600	4
WASHER 6.5X20X1.6T (Ref # 14)	92022-125	6
BRACKET,SEAT CATCH (Ref # 15)	53058-002	1
CATCH, SEAT (Ref # 16)	53056-002	1
BOLT-UPSET,6X12 (Ref # 17)	112G0612	1
WASHER SPRING 6MM (Ref # 18)	461F0600	1
LOCK-ASSY,SEAT (Ref # 19)	27016-5010	1
LOCK-ASSY,SEAT (Ref # 19)	27016-5010	1
CASE (Ref # 20)	32099-011	1
GROMMET (Ref # 21)	92071-056	1
SCREW PAN HEAD 5X10 (Ref # 22)	220B0510	2

© 2026 Kawasaki Motors Corp., U.S.A.