1976 KZ750-B1

PARTS DIAGRAM

FRONT HUB

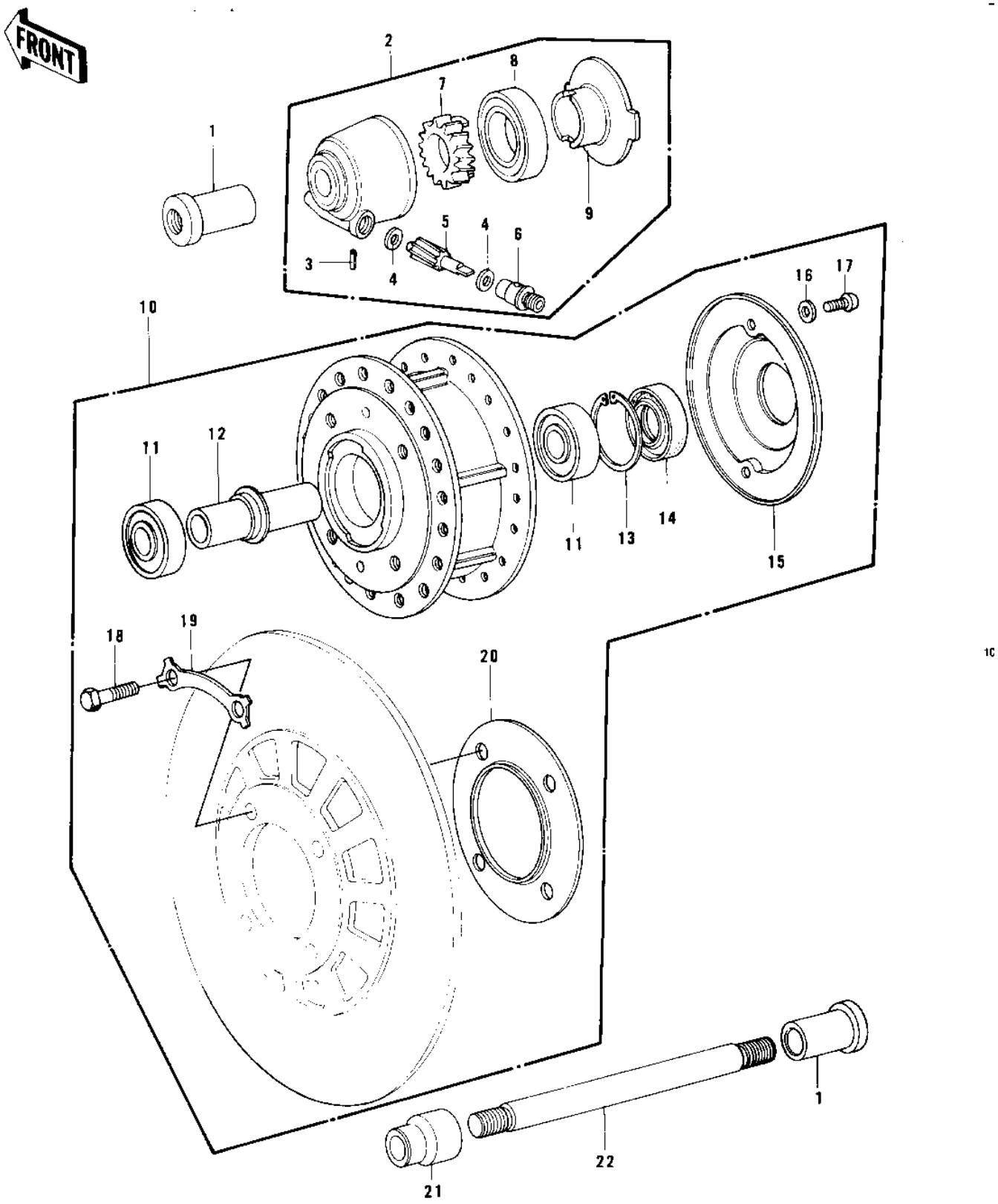

© 2026 Kawasaki Motors Corp., U.S.A.

1976 KZ750-B1

PARTS LIST

FRONT HUB

ITEM NAME	PART NUMBER	QUANTITY
COLLAR,FRONT AXLE (Ref # 1)	41069-033	2
GEAR BOX ASSY (Ref # 2)	41078-008	1
PIN,SPRING (Ref # 3)	41082-001	1
WASHER THRST SPD PINI (Ref # 4)	41063-001	2
PINION,SPEEDOMETER (Ref # 5)	41060-017	1
BUSH,SPEEDMETER CABLE (Ref # 6)	41062-005	1
GEAR,SPEEDOMETER (Ref # 7)	41059-026	1
OIL SEAL,BJN30427-C3 (Ref # 8)	92049-1057	1
RECEIVER,GEAR (Ref # 9)	41064-013	1
DRUM-ASSY,FR BRK (Ref # 10)	41034-041	1
BEARING BALL #6203 (Ref # 11)	601B6203	2
COLLAR,BRG (Ref # 12)	41039-028	1
RING, SNAP,43.5M/M (Ref # 13)	92033-1040	1
OIL SEAL (Ref # 14)	654A254008	1
DUST COVER (Ref # 15)	41042-016	1
WASHER PLAIN 5MM (Ref # 16)	411B0500	2
SCREW PAN HEAD 5X12 (Ref # 17)	220B0512	2
BOLT (Ref # 18)	92001-158	4
WASHER,LOCK (Ref # 19)	92088-023	2
DUST COVER (Ref # 20)	41042-014	1
COLLAR,FRONT AXLE (Ref # 21)	41069-032	1
AXLE,FRONT (Ref # 22)	41068-049	1

© 2026 Kawasaki Motors Corp., U.S.A.