# 2005 800 SX-R

## PARTS DIAGRAM

### Flame Arrester

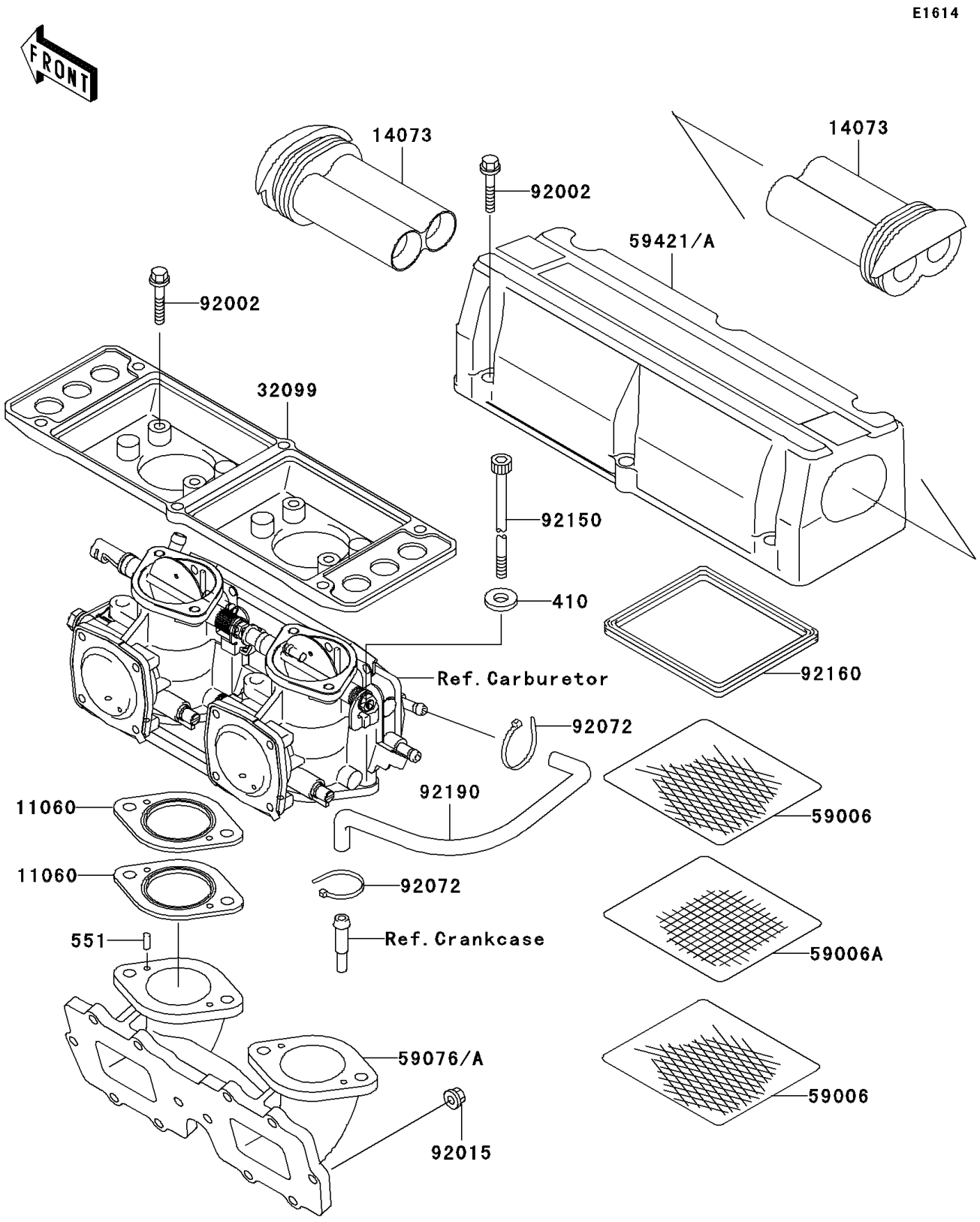


© 2026 Kawasaki Motors Corp., U.S.A.

# 2005 800 SX-R

## PARTS LIST

### Flame Arrester

| ITEM NAME | PART NUMBER | QUANTITY |
|---|---|---|
| WASHER-PLAIN-SMALL,8MM (Ref # 410) | 410S0800 | 4 |
| PIN-DOWEL (Ref # 551) | 551R0416 | 4 |
| GASKET,CARBURETOR (Ref # 11060) | 11060-3761 | 4 |
| DUCT (Ref # 14073) | 14073-3733 | 2 |
| CASE (Ref # 32099) | 32099-3801 | 1 |
| ARRESTER-FLAME (Ref # 59006) | 59006-3707 | 4 |
| ARRESTER-FLAME (Ref # 59006A) | 59006-3708 | 2 |
| MANIFOLD-INTAKE (Ref # 59076A) | 59076-3730 | 1 |
| COVER-INTAKE (Ref # 59421A) | 59421-3733 | 1 |
| BOLT,6X30 (Ref # 92002) | 92002-3726 | 10 |
| NUT,CAP,6MM (Ref # 92015) | 92015-1385 | 12 |
| BAND (Ref # 92072) | 92072-3874 | 2 |
| BOLT,SOCKET,8X85 (Ref # 92150) | 92150-3852 | 4 |
| DAMPER (Ref # 92160) | 92160-3704 | 2 |
| TUBE (Ref # 92190) | 92190-3965 | 1 |

© 2026 Kawasaki Motors Corp., U.S.A.